VET MG
Fitting, T shaped

Properties

Connection 1	metric nut thread
Sealing form 1	Pipe socket with cutting ring
Connection 2 + 3	metric cylindrical outer thread
Sealing form 2 + 3	24° inner cone
Design	Adjustable direction fitting
Construction	T shaped
Standard	DIN 2353 ISO 8434-1
Scope of supply	Socket with union nut and cutting ring
Material	Brass



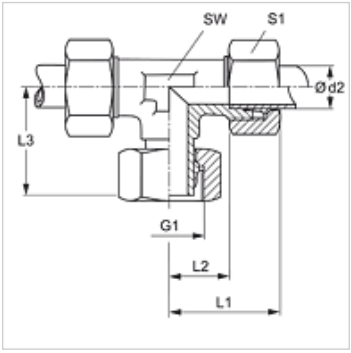

Note

Information about fitting, installation, pressure loads and permissible operating temperatures can be found in the technical information for pipe fittings.

Item

Identification	Series	Operating pressure	Ø d2 (mm)	G1	L1 (mm)	L2 (mm)	L3 (mm)	AF (mm)	S1
VET NW 04 HL MG	L	PN 200	6	M 12 x 1.5	27	12,0	26,0	12	14
VET NW 06 HL MG	L	PN 200	8	M 14 x 1.5	29	14,0	27,0	12	17
VET NW 08 HL MG	L	PN 200	10	M 16 x 1.5	30	15,0	28,5	14	19
VET NW 10 HL MG	L	PN 200	12	M 18 x 1.5	32	17,0	29,0	17	22
VET NW 13 HL MG	L	PN 200	15	M 22 x 1.5	36	21,0	32,0	19	27
VET NW 16 HL MG	L	PN 200	18	M 26 x 1.5	40	23,5	36,0	24	32
VET NW 04 HS MG	S	PN 250	8	M 16 x 1.5	32	17,0	27,0	14	19

Series: LL = Very light L = Light S = Heavy – PN = Nominal pressure PB = Max. operating pressure – Ø d2 = External pipe diameter

Product versions

VET	Fitting, T shaped, Steel
VET VA	Fitting, T shaped, Stainless steel

Despite careful checking, we cannot guarantee the accuracy of all information included on this site, and we accept no liability.