RIK
Reducing adapter, short

Properties

Connection 1	BSP external thread, cylindrical
Sealing form 1	Shape B
Connection 2	BSP cylindrical internal threads
Design	Reducing adapters
Construction	short
Material	Steel
Surface	electro galvanised

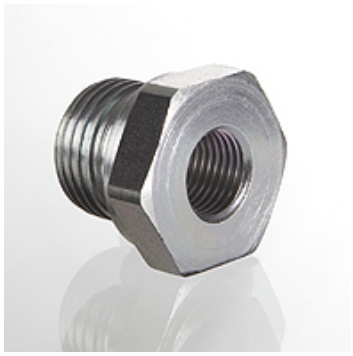

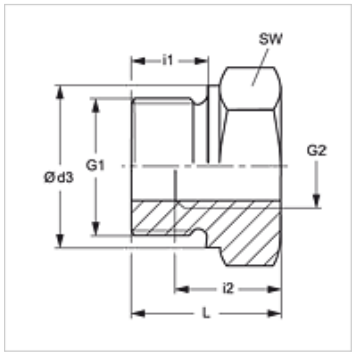

Note

Information about fitting, installation, pressure loads and permissible operating temperatures can be found in the technical information for pipe fittings.

Item

Identification	Operating pressure	G1	G2	Ø d3 (mm)	i1 (mm)	i2 (mm)	L (mm)	AF (mm)
RIK NW 10 03	PN 400	G 3/8" -19	G 1/8" -28	22	12	9	22,5	22
RIK NW 13 03	PN 400	G 1/2" -14	G 1/8" -28	26	14	9	24,0	27
RIK NW 13 06	PN 315	G 1/2" -14	G 1/4" -19	26	14	13	24,0	27
RIK NW 20 06	PN 315	G 3/4" -14	G 1/4" -19	32	16	13	26,0	32
RIK NW 20 10	PN 315	G 3/4" -14	G 3/8" -19	32	16	14	26,0	32
RIK NW 25 06	PN 315	G 1" -11	G 1/4" -19	39	18	14	29,0	41
RIK NW 25 10	PN 315	G 1" -11	G 3/8" -19	39	18	14	29,0	41
RIK NW 25 13	PN 315	G 1" -11	G 1/2" -14	39	18	16	29,0	41
RIK NW 32 13	PN 160	G 1.1/4" -11	G 1/2" -14	49	20	16	32,0	50
RIK NW 32 20	PN 160	G 1.1/4" -11	G 3/4" -14	49	20	18	32,0	50
RIK NW 40 13	PN 160	G 1.1/2" -11	G 1/2" -14	55	22	16	36,0	55
RIK NW 40 20	PN 160	G 1.1/2" -11	G 3/4" -14	55	22	18	36,0	55
RIK NW 40 25	PN 160	G 1.1/2" -11	G 1" -11	55	22	20	36,0	55

PN = Nominal pressure PB = Max. operating pressure

Product versions

RIK MG	Reducing adapter, short, Brass
RIK VA	Reducing adapter, short, Stainless steel

Despite careful checking, we cannot guarantee the accuracy of all information included on this site, and we accept no liability.