XETOM
Screw-in fitting, T shaped

Properties

Connection 1	metric cylindrical outer thread
Sealing form 1	O-ring seal on screw-in socket
Connection 2 + 3	metric cylindrical outer thread
Sealing form 2 + 3	24° inner cone
Design	Adjustable direction screw-in fitting
Construction	T shaped
Standard	ISO 8434-1
Scope of supply	Socket (without union nut and cutting ring)
Material	Steel
Surface	electro galvanised



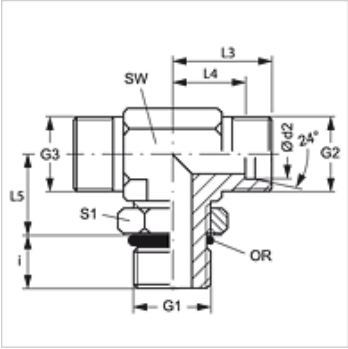

Note

Information about fitting, installation, pressure loads and permissible operating temperatures can be found in the technical information for pipe fittings.

Item

Identification	Series	Operating pressure	Ø d2 (mm)	G1	G2 + G3	i (mm)	L3 (mm)	L4 (mm)	L5 (mm)	AF (mm)	S1	OR
XETOM NW 04 HL	L	PN 315	6	M 10 x 1	M 12 x 1.5	7	21	14	20	14	14	8.1 x 1.6
XETOM NW 06 HL	L	PN 315	8	M 12 x 1.5	M 14 x 1.5	10	23	16	22	14	17	9.3 x 2.4
XETOM NW 08 HL	L	PN 315	10	M 14 x 1.5	M 16 x 1.5	10	24	17	25	19	19	11.3 x 2.4
XETOM NW 10 HL	L	PN 315	12	M 16 x 1.5	M 18 x 1.5	10	26	19	26	19	22	13.3 x 2.4
XETOM NW 13 HL	L	PN 315	15	M 18 x 1.5	M 22 x 1.5	11	28	21	30	22	24	15.3 x 2.4
XETOM NW 16 HL	L	PN 315	18	M 22 x 1.5	M 26 x 1.5	12	31	24	33	27	27	19.3 x 2.4
XETOM NW 20 HL 27	L	PN 160	22	M 27 x 2	M 30 x 2	14	35	28	35	30	32	23.6 x 2.9
XETOM NW 25 HL	L	PN 160	28	M 33 x 2	M 36 x 2	14	38	31	38	36	41	29.5 x 3.0
XETOM NW 32 HL	L	PN 160	35	M 42 x 2	M 45 x 2	14	48	38	48	50	50	38.0 x 3.0
XETOM NW 40 HL	L	PN 160	42	M 48 x 2	M 52 x 2	16	49	38	49	50	55	44.5 x 3.0
XETOM NW 03 HS	S	PN 400	6	M 12 x 1.5	M 14 x 1.5	10	22	15	22	14	17	9.3 x 2.4
XETOM NW 04 HS	S	PN 400	8	M 14 x 1.5	M 16 x 1.5	10	24	17	26	19	19	11.3 x 2.4
XETOM NW 06 HS	S	PN 400	10	M 16 x 1.5	M 18 x 1.5	11	25	19	27	19	22	13.3 x 2.4
XETOM NW 08 HS	S	PN 400	12	M 18 x 1.5	M 20 x 1.5	12	29	22	31	22	24	15.3 x 2.4
XETOM NW 10 HS	S	PN 250	14	M 20 x 1.5	M 22 x 1.5	14	33	25	35	27	27	17.3 x 2.4
XETOM NW 13 HS	S	PN 400	16	M 22 x 1.5	M 24 x 1.5	14	33	25	35	27	27	19.3 x 2.4
XETOM NW 16 HS	S	PN 400	20	M 27 x 2	M 30 x 2	16	38	28	39	30	32	23.6 x 2.9
XETOM NW 20 HS	S	PN 315	25	M 33 x 2	M 36 x 2	16	42	30	44	36	41	29.5 x 3.0
XETOM NW 25 HS	S	PN 250	30	M 42 x 2	M 42 x 2	17	49	36	51	50	50	38.0 x 3.0
XETOM NW 32 HS	S	PN 200	38	M 48 x 2	M 52 x 2	19	50	34	54	50	55	44.5 x 3.0

Series: LL = Very light L = Light S = Heavy – PN = Nominal pressure PB = Max. operating pressure – Ø d2 = External pipe diameter

Product versions

ETOM	Screw-in fitting, T shaped, Socket with union nut and cutting ring

Despite careful checking, we cannot guarantee the accuracy of all information included on this site, and we accept no liability.