XETOMK
Screw-in fitting, T shaped

Properties

Connection 1	metric cylindrical outer thread
Sealing form 1	O-ring and spacer diaphragm ring
Connection 2 + 3	metric cylindrical outer thread
Sealing form 2 + 3	24° inner cone
Design	Adjustable direction screw-in fitting
Construction	T shaped
Standard	ISO 8434-1
Scope of supply	Socket (without union nut and cutting ring)
Material	Steel
Surface	electro galvanised



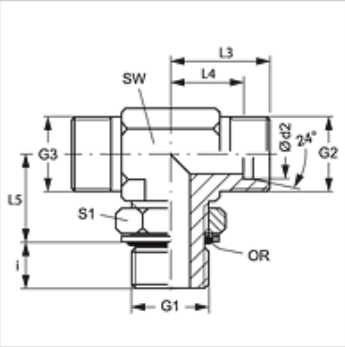

Note

Information about fitting, installation, pressure loads and permissible operating temperatures can be found in the technical information for pipe fittings.

Item

Identification	Series	Operating pressure	Ø d2 (mm)	G1	G2 + G3	i (mm)	L3 (mm)	L4 (mm)	L5 (mm)	AF (mm)	S1	OR
XETOMK NW 04 HL	L	PN 315	6	M 10 x 1	M 12 x 1.5	7	21	14	20	14	13	8.1 x 1.6
XETOMK NW 06 HL	L	PN 315	8	M 12 x 1.5	M 14 x 1.5	10	23	16	22	14	17	9.3 x 2.4
XETOMK NW 08 HL	L	PN 315	10	M 14 x 1.5	M 16 x 1.5	9	24	17	25	19	17	11.3 x 2.4
XETOMK NW 10 HL	L	PN 315	12	M 16 x 1.5	M 18 x 1.5	9	26	19	26	19	19	13.3 x 2.4
XETOMK NW 13 HL	L	PN 315	15	M 18 x 1.5	M 22 x 1.5	11	28	21	30	22	22	15.3 x 2.4
XETOMK NW 16 HL	L	PN 315	18	M 22 x 1.5	M 26 x 1.5	11	31	24	33	27	27	19.3 x 2.4
XETOMK NW 20 HL	L	PN 160	22	M 26 x 1.5	M 30 x 2	16	35	28	35	30	36	23.3 x 2.4
XETOMK NW 20 HL 27	L	PN 160	22	M 27 x 2	M 30 x 2	14	35	28	35	30	32	23.6 x 2.9
XETOMK NW 25 HL	L	PN 160	28	M 33 x 2	M 36 x 2	14	38	31	38	36	38	29.5 x 3.0
XETOMK NW 32 HL	L	PN 160	35	M 42 x 2	M 45 x 2	14	48	38	48	50	50	38.0 x 3.0
XETOMK NW 40 HL	L	PN 160	42	M 48 x 2	M 52 x 2	16	49	38	49	50	55	44.5 x 3.0
XETOMK NW 03 HS	S	PN 400	6	M 12 x 1.5	M 14 x 1.5	10	22	15	22	14	17	9.3 x 2.4
XETOMK NW 04 HS	S	PN 400	8	M 14 x 1.5	M 16 x 1.5	10	20	17	26	19	17	11.3 x 2.4
XETOMK NW 06 HS	S	PN 400	10	M 16 x 1.5	M 18 x 1.5	11	25	18	27	19	19	13.3 x 2.4
XETOMK NW 08 HS	S	PN 400	12	M 18 x 1.5	M 20 x 1.5	12	29	22	31	22	22	15.3 x 2.4
XETOMK NW 10 HS	S	PN 400	14	M 20 x 1.5	M 22 x 1.5	14	33	25	25	22	27	17.3 x 2.4
XETOMK NW 13 HS	S	PN 400	16	M 22 x 1.5	M 24 x 1.5	14	33	25	35	27	27	19.3 x 2.4
XETOMK NW 16 HS	S	PN 400	20	M 27 x 2	M 30 x 2	16	38	28	39	30	32	23.6 x 2.9
XETOMK NW 20 HS	S	PN 315	25	M 33 x 2	M 36 x 2	16	42	30	44	36	38	29.5 x 3.0
XETOMK NW 25 HS	S	PN 250	30	M 42 x 2	M 42 x 2	17	49	36	51	50	50	38.0 x 3.0
XETOMK NW 32 HS	S	PN 200	38	M 48 x 2	M 52 x 2	19	50	34	54	50	55	44.5 x 3.0

Series: LL = Very light L = Light S = Heavy – PN = Nominal pressure PB = Max. operating pressure – Ø d2 = External pipe diameter

Product versions

ETOMK	Screw-in fitting, T shaped, Socket with union nut and cutting ring

Despite careful checking, we cannot guarantee the accuracy of all information included on this site, and we accept no liability.