XETOR
Screw-in fitting, T shaped

HANSA-FLEX

Properties

Connection 1	BSP external thread, cylindrical
Sealing form 1	form G
Connection 2 + 3	metric cylindrical outer thread
Sealing form 2 + 3	24° inner cone
Design	Adjustable direction screw-in fitting
Construction	T shaped
Standard	ISO 8434-1
Scope of supply	Socket (without union nut and cutting ring)
Material	Steel
Surface	electro galvanised



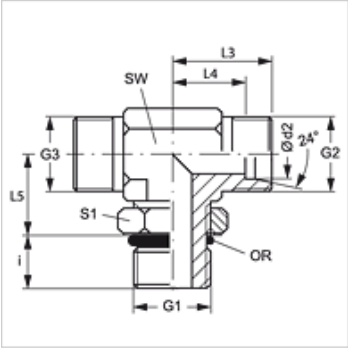

Note

Information about fitting, installation, pressure loads and permissible operating temperatures can be found in the technical information for pipe fittings.

Item

Identification	Series	Operating pressure	Ø d2 (mm)	G1	G2 + G3	i (mm)	L3 (mm)	L4 (mm)	L5 (mm)	AF (mm)	S1	OR
XETOR NW 04 HL	L	PN 315	6	G 1/8" -28	M 12 x 1.5	7	21	14	19	14	14	8.00 x 1.50
XETOR NW 06 HL	L	PN 315	8	G 1/4" -19	M 14 x 1.5	9	23	16	23	14	19	10.77 x 2.62
XETOR NW 08 HL	L	PN 315	10	G 1/4" -19	M 16 x 1.5	9	24	17	25	19	19	10.77 x 2.62
XETOR NW 10 HL	L	PN 250	12	G 3/8" -19	M 18 x 1.5	9	26	19	28	19	22	13.94 x 2.62
XETOR NW 13 HL	L	PN 250	15	G 1/2" -14	M 22 x 1.5	13	28	21	30	22	27	17.86 x 2.62
XETOR NW 16 HL	L	PN 250	18	G 1/2" -14	M 26 x 1.5	13	31	24	36	27	27	17.86 x 2.62
XETOR NW 20 HL	L	PN 160	22	G 3/4" -14	M 30 x 2	13	35	28	36	30	36	23.47 x 2.62
XETOR NW 25 HL	L	PN 160	28	G 1" -11	M 36 x 2	15	38	31	44	36	41	29.50 x 3.53
XETOR NW 32 HL	L	PN 160	35	G 1.1/4" -11	M 45 x 2	15	48	38	50	50	50	37.69 x 3.53
XETOR NW 40 HL	L	PN 160	42	G 1.1/2" -11	M 52 x 2	15	49	38	52	50	50	44.04 x 3.53
XETOR NW 03 HS	S	PN 315	6	G 1/4" -19	M 14 x 1.5	9	22	15	23	14	19	10.77 x 2.62
XETOR NW 04 HS	S	PN 315	8	G 1/4" -19	M 16 x 1.5	9	24	17	27	19	19	10.77 x 2.62
XETOR NW 06 HS	S	PN 250	10	G 3/8" -19	M 18 x 1.5	9	25	18	29	19	22	13.94 x 2.62
XETOR NW 08 HS	S	PN 250	12	G 3/8" -19	M 20 x 1.5	9	29	22	29	22	22	13.94 x 2.62
XETOR NW 10 HS	S	PN 250	14	G 1/2" -14	M 22 x 1.5	13	43	25	36	27	27	17.86 x 2.62
XETOR NW 13 HS	S	PN 250	16	G 1/2" -14	M 24 x 1.5	13	33	25	36	27	27	17.86 x 2.62
XETOR NW 16 HS	S	PN 250	20	G 3/4" -14	M 30 x 2	12	38	28	39	30	36	23.47 x 2.62
XETOR NW 20 HS	S	PN 250	25	G 1" -11	M 36 x 2	14	42	30	44	36	41	29.74 x 3.53
XETOR NW 25 HS	S	PN 160	30	G 1.1/4" -11	M 42 x 2	15	49	36	49	50	50	37.69 x 3.53
XETOR NW 32 HS	S	PN 160	38	G 1.1/2" -11	M 52 x 2	15	50	34	55	50	55	44.04 x 3.53

Series: LL = Very light L = Light S = Heavy – PN = Nominal pressure PB = Max. operating pressure – Ø d2 = External pipe diameter

Despite careful checking, we cannot guarantee the accuracy of all information included on this site, and we accept no liability.