RIL ED
Reducing adapter, long

HANSA-FLEX

Properties

Connection 1	BSP external thread, cylindrical
Sealing form 1	Shape E
Connection 2	BSP cylindrical internal threads
Design	Reducing adapters
Construction	Long
Material	Steel
Surface	electro galvanised



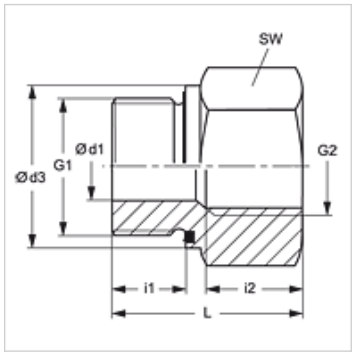

Note

Information about fitting, installation, pressure loads and permissible operating temperatures can be found in the technical information for pipe fittings.

Item

Identification	Operating pressure	Ø d1 (mm)	G1	G2	Ø d3 (mm)	i1 (mm)	i2 (mm)	L (mm)	AF (mm)
RIL NW 03 06 ED	PN 400	4	G 1/8" -28	G 1/4" -19	13,9	8	17,0	31,0	19
RIL NW 03 10 ED	PN 400	4	G 1/8" -28	G 3/8" -19	13,9	8	17,0	32,0	24
RIL NW 06 03 ED	PN 400	5	G 1/4" -19	G 1/8" -28	18,9	12	12,0	28,0	19
RIL NW 06 10 ED	PN 400	5	G 1/4" -19	G 3/8" -19	18,9	12	17,0	36,0	24
RIL NW 06 13 ED	PN 400	5	G 1/4" -19	G 1/2" -14	18,9	12	20,0	40,0	27
RIL NW 06 20 ED	PN 400	5	G 1/4" -19	G 3/4" -14	18,9	12	22,0	43,0	36
RIL NW 10 06 ED	PN 400	8	G 3/8" -19	G 1/4" -19	21,9	12	17,0	36,0	22
RIL NW 10 13 ED	PN 400	8	G 3/8" -19	G 1/2" -14	21,9	12	20,0	41,0	27
RIL NW 10 20 ED	PN 315	8	G 3/8" -19	G 3/4" -14	21,9	12	22,0	44,0	36
RIL NW 13 10 ED	PN 400	12	G 1/2" -14	G 3/8" -19	26,9	14	17,0	36,0	27
RIL NW 13 20 ED	PN 315	12	G 1/2" -14	G 3/4" -14	26,9	14	22,0	46,0	36
RIL NW 13 25 ED	PN 315	12	G 1/2" -14	G 1" -11	26,9	14	24,5	49,0	41
RIL NW 13 32 ED	PN 315	10	G 1/2" -14	G 1.1/4" -11	26,9	14	26,5	53,0	55
RIL NW 20 13 ED	PN 315	16	G 3/4" -14	G 1/2" -14	31,9	16	20,0	41,0	32
RIL NW 20 25 ED	PN 315	16	G 3/4" -14	G 1" -11	31,9	16	24,5	51,0	41
RIL NW 20 32 ED	PN 315	16	G 3/4" -14	G 1.1/4" -11	31,9	16	26,5	55,0	55
RIL NW 20 40 ED	PN 250	16	G 3/4" -14	G 1.1/2" -11	31,9	16	28,5	57,0	60
RIL NW 25 20 ED	PN 315	20	G 1" -11	G 3/4" -14	39,9	18	22,0	47,0	41
RIL NW 25 32 ED	PN 315	20	G 1" -11	G 1.1/4" -11	39,9	18	26,5	57,0	55
RIL NW 25 40 ED	PN 250	20	G 1" -11	G 1.1/2" -11	39,9	18	28,5	59,0	60
RIL NW 32 25 ED	PN 315	25	G 1.1/4" -11	G 1" -11	49,9	20	24,5	52,0	50
RIL NW 32 40 ED	PN 250	25	G 1.1/4" -11	G 1.1/2" -11	49,9	20	28,5	60,0	60
RIL NW 40 32 ED	PN 250	32	G 1.1/2" -11	G 1.1/4" -11	54,9	22	26,5	58,0	55
RIL NW 50 40 ED	PN 160	40	G 2" -11	G 1.1/2" -11	69,9	24	28,5	65,5	70

PN = Nominal pressure PB = Max. operating pressure

Product versions

RIL ED VA	Reducing adapter, long, Stainless steel

Spare parts

WD	Soft seal for ED fittings

Despite careful checking, we cannot guarantee the accuracy of all information included on this site, and we accept no liability.