XETORK
Screw-in fitting, T shaped

HANSA-FLEX

Properties

Connection 1	BSP external thread, cylindrical
Sealing form 1	O-ring and spacer diaphragm ring
Connection 2 + 3	metric cylindrical outer thread
Sealing form 2 + 3	24° inner cone
Design	Adjustable direction screw-in fitting
Construction	T shaped
Standard	ISO 8434-1
Scope of supply	Socket (without union nut and cutting ring)
Material	Steel
Surface	electro galvanised



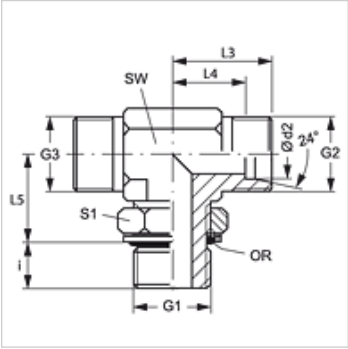

Note

Information about fitting, installation, pressure loads and permissible operating temperatures can be found in the technical information for pipe fittings.

Item

Identification	Series	Operating pressure	Ø d2 (mm)	G1	G2 + G3	i (mm)	L3 (mm)	L4 (mm)	L5 (mm)	AF (mm)	S1	OR
XETORK NW 04 HL	L	PN 315	6	G 1/8" -28	M 12 x 1.5	7	21	14	19	14	14	8.00 x 1.50
XETORK NW 06 HL	L	PN 315	8	G 1/4" -19	M 14 x 1.5	9	23	16	23	14	19	10.77 x 2.62
XETORK NW 08 HL	L	PN 315	10	G 1/4" -19	M 16 x 1.5	9	24	17	25	19	19	10.77 x 2.62
XETORK NW 10 HL	L	PN 250	12	G 3/8" -19	M 18 x 1.5	9	26	19	28	19	22	13.94 x 2.62
XETORK NW 13 HL	L	PN 250	15	G 1/2" -14	M 22 x 1.5	13	28	21	30	22	27	17.86 x 2.62
XETORK NW 16 HL	L	PN 250	18	G 1/2" -14	M 26 x 1.5	13	31	24	36	27	27	17.86 x 2.62
XETORK NW 20 HL	L	PN 160	22	G 3/4" -14	M 30 x 2	13	35	28	36	30	36	23.47 x 2.62
XETORK NW 25 HL	L	PN 160	28	G 1" -11	M 36 x 2	15	38	31	44	36	41	29.50 x 3.53
XETORK NW 32 HL	L	PN 160	35	G 1.1/4" -11	M 45 x 2	15	48	38	50	50	50	37.69 x 3.53
XETORK NW 40 HL	L	PN 160	42	G 1.1/2" -11	M 52 x 2	15	49	38	52	50	50	44.04 x 3.53
XETORK NW 03 HS	S	PN 315	6	G 1/4" -19	M 14 x 1.5	9	22	15	23	14	19	10.77 x 2.62
XETORK NW 04 HS	S	PN 315	8	G 1/4" -19	M 16 x 1.5	9	24	17	27	19	19	10.77 x 2.62
XETORK NW 06 HS	S	PN 250	10	G 3/8" -19	M 18 x 1.5	9	25	18	29	19	22	13.94 x 2.62
XETORK NW 08 HS	S	PN 250	12	G 3/8" -19	M 20 x 1.5	9	29	22	29	22	22	13.94 x 2.62
XETORK NW 10 HS	S	PN 250	14	G 1/2" -14	M 22 x 1.5	13	33	25	36	27	27	17.86 x 2.62
XETORK NW 13 HS	S	PN 250	16	G 1/2" -14	M 24 x 1.5	13	33	25	36	27	27	17.86 x 2.62
XETORK NW 16 HS	S	PN 250	20	G 3/4" -14	M 30 x 2	12	38	28	39	30	36	23.47 x 2.62
XETORK NW 20 HS	S	PN 250	25	G 1" -11	M 36 x 2	14	42	30	44	36	41	29.74 x 3.53
XETORK NW 25 HS	S	PN 160	30	G 1.1/4" -11	M 42 x 2	15	49	36	49	50	50	37.69 x 3.53
XETORK NW 32 HS	S	PN 160	38	G 1.1/2" -11	M 52 x 2	15	50	34	55	50	55	44.04 x 3.53

Series: LL = Very light L = Light S = Heavy – PN = Nominal pressure PB = Max. operating pressure – Ø d2 = External pipe diameter

Despite careful checking, we cannot guarantee the accuracy of all information included on this site, and we accept no liability.