SA
Welded on fitting

HANSA-FLEX

Properties

Connection 1	Welded on socket for metric pipe
Connection 2	metric cylindrical outer thread
Sealing form 2	24° inner cone
Design	Welded on fitting
Construction	straight
Standard	DIN 2353 ISO 8434-1
Scope of supply	Socket with union nut and cutting ring
Material	Steel
Surface	phosphate treated and oiled (Znphr5f)

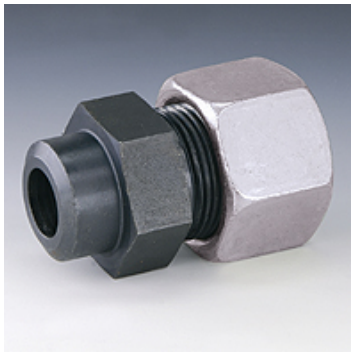

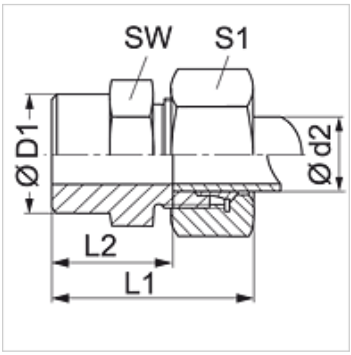

Note

Information about fitting, installation, pressure loads and permissible operating temperatures can be found in the technical information for pipe fittings.

Item

Identification	Series	Operating pressure	Ø d2 (mm)	Ø D1 (mm)	L1 (mm)	L2 (mm)	AF (mm)	S1
SA NW 04 HL	L	PN 315	6	10	29	14,0	14	14
SA NW 06 HL	L	PN 315	8	12	31	16,0	14	17
SA NW 08 HL	L	PN 315	10	14	33	18,0	17	19
SA NW 10 HL	L	PN 315	12	16	33	18,0	19	22
SA NW 13 HL	L	PN 315	15	19	37	22,0	22	27
SA NW 16 HL	L	PN 315	18	22	40	23,5	27	32
SA NW 20 HL	L	PN 160	22	27	45	28,5	32	36
SA NW 25 HL	L	PN 160	28	32	47	30,5	41	41
SA NW 32 HL	L	PN 160	35	40	54	32,5	46	50
SA NW 40 HL	L	PN 160	42	46	58	35,0	55	60
SA NW 03 HS	S	PN 630	6	11	34	19,0	14	17
SA NW 04 HS	S	PN 630	8	13	36	21,0	17	19
SA NW 06 HS	S	PN 630	10	15	39	22,5	19	22
SA NW 08 HS	S	PN 630	12	17	41	24,5	22	24
SA NW 10 HS	S	PN 630	14	19	45	27,0	24	27
SA NW 13 HS	S	PN 400	16	21	45	26,6	27	30
SA NW 16 HS	S	PN 400	20	26	51	29,5	32	36
SA NW 20 HS	S	PN 400	25	31	56	32,0	41	46
SA NW 25 HS	S	PN 400	30	36	62	35,5	46	50
SA NW 32 HS	S	PN 315	38	44	69	38,0	55	60

Series: LL = Very light L = Light S = Heavy – PN = Nominal pressure PB = Max. operating pressure – Ø d2 = External pipe diameter

Product versions

SA MG	Welded on fitting, Brass
SA VA	Welded on fitting, Stainless steel
XSA	Welded on fitting, Steel

Despite careful checking, we cannot guarantee the accuracy of all information included on this site, and we accept no liability.