SV VA
Bulkhead fitting

HANSA-FLEX

Properties

Connection 1 + 2	metric cylindrical outer thread
Sealing form 1 + 2	24° inner cone
Design	Bulkhead fitting
Construction	straight
Standard	DIN 2353 ISO 8434-1
Scope of supply	Socket with union nut and cutting ring
Material	Stainless steel



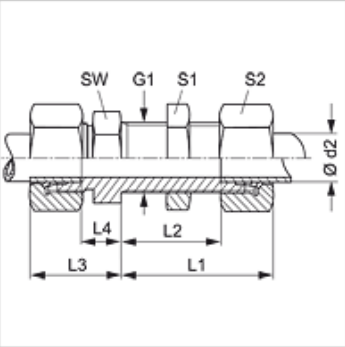

Note

Information about fitting, installation, pressure loads and permissible operating temperatures can be found in the technical information for pipe fittings.

Item

Identification	Series	Operating pressure	Ø d2 (mm)	G1	L1 (mm)	L2 (mm)	L3 (mm)	L4 (mm)	AF (mm)	S1	S2
SV NW 04 HL VA	L	PN 315	6	M 12 x 1.5	42	27,0	22	7,0	17	17	14
SV NW 06 HL VA	L	PN 315	8	M 14 x 1.5	42	27,0	23	8,0	19	19	17
SV NW 08 HL VA	L	PN 315	10	M 16 x 1.5	43	28,0	25	10,0	22	22	19
SV NW 10 HL VA	L	PN 315	12	M 18 x 1.5	44	29,0	25	10,0	24	24	22
SV NW 13 HL VA	L	PN 315	15	M 22 x 1.5	46	31,0	27	12,0	27	30	27
SV NW 16 HL VA	L	PN 315	18	M 26 x 1.5	49	32,5	30	13,5	32	36	32
SV NW 20 HL VA	L	PN 160	22	M 30 x 2	51	34,5	33	16,5	36	41	36
SV NW 25 HL VA	L	PN 160	28	M 36 x 2	52	35,5	35	18,5	41	46	41
SV NW 32 HL VA	L	PN 160	35	M 45 x 2	58	36,5	40	18,5	50	55	50
SV NW 40 HL VA	L	PN 160	42	M 52 x 2	59	36,0	42	19,0	60	65	60
SV NW 03 HS VA	S	PN 630	6	M 14 x 1.5	44	29,0	27	12,0	19	19	17
SV NW 04 HS VA	S	PN 630	8	M 16 x 1.5	44	29,0	28	13,0	22	22	19
SV NW 06 HS VA	S	PN 630	10	M 18 x 1.5	46	29,5	31	14,5	24	24	22
SV NW 08 HS VA	S	PN 630	12	M 20 x 1.5	47	30,5	31	14,5	27	27	24
SV NW 10 HS VA	S	PN 630	14	M 22 x 1.5	50	32,0	35	17,0	30	30	27
SV NW 13 HS VA	S	PN 400	16	M 24 x 1.5	50	31,5	35	16,5	32	32	30
SV NW 16 HS VA	S	PN 400	20	M 30 x 2	55	33,5	39	17,5	41	41	36
SV NW 20 HS VA	S	PN 400	25	M 36 x 2	59	35,0	44	20,0	46	46	46
SV NW 25 HS VA	S	PN 400	30	M 42 x 2	64	37,5	48	21,5	50	50	50
SV NW 32 HS VA	S	PN 315	38	M 52 x 2	68	37,0	53	22,0	65	65	60

Series: LL = Very light L = Light S = Heavy – PN = Nominal pressure PB = Max. operating pressure – Ø d2 = External pipe diameter

Product versions

SV	Bulkhead fitting, Steel
SV MG	Bulkhead fitting, Brass
XSV VA	Bulkhead fitting, Stainless steel

Despite careful checking, we cannot guarantee the accuracy of all information included on this site, and we accept no liability.