FFM

Locking socket, French series

Properties

Connection 1	metric nut thread
Sealing form 1	24° outer cone
Design	Cap
Construction type	French series
Material	Steel
Surface	electro galvanised



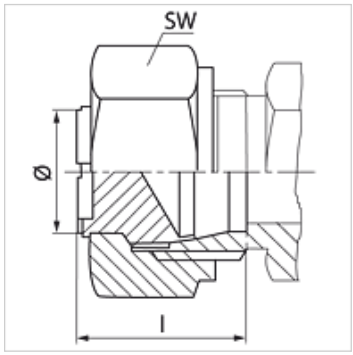

Note

Information about fitting, installation, pressure loads and permissible operating temperatures can be found in the technical information for pipe fittings.

Item

Identification	Operating pressure	External pipe Ø (mm)	M	l (mm)	AF (mm)
FFM NW 13	PN 250	16,75	M 24 x 1.5	20	30
FFM NW 16	PN 250	21,25	M 30 x 1.5	21	36
FFM NW 20	PN 250	26,75	M 36 x 1.5	22	46

Series: LL = Very light L = Light S = Heavy – PN = Nominal pressure PB = Max. operating pressure – Ø = External pipe diameter

Despite careful checking, we cannot guarantee the accuracy of all information included on this site, and we accept no liability.