VMO
Screw-in fitting

Properties

Connection 1	metric cylindrical outer thread
Sealing form 1	Shape F
Connection 2	metric cylindrical outer thread
Sealing form 2	24° inner cone
Design	Screw-in fitting
Construction	straight
Standard	ISO 8434-1
Scope of supply	Socket with union nut and cutting ring
Material	Steel
Surface	electro galvanised



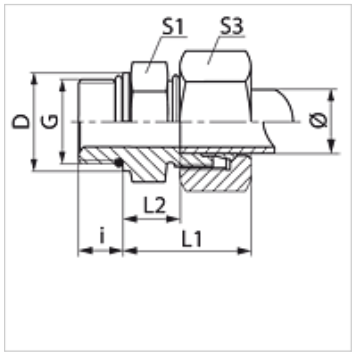

Note

Information about fitting, installation, pressure loads and permissible operating temperatures can be found in the technical information for pipe fittings.

Item

Identification	Series	Operating pressure	External pipe Ø (mm)	G	D (mm)	i (mm)	L1 (mm)	L2 (mm)	S1	S3	OR
VMO 04 LL	LL	PN 100	4	M 8 x 1	10,8	6,5	19,0	9,5	11	10	6.1 x 1.6
VMO 04 LL 10	LL	PN 100	4	M 10 x 1	12,8	6,5	19,0	9,5	13	10	8.0 x 1.5
VMO 06 LL	LL	PN 100	6	M 10 x 1	12,8	6,5	19,5	8,0	13	12	8.0 x 1.5
VMO NW 04 HL	L	PN 250	6	M 10 x 1	14,0	8,0	23,0	8,5	14	14	8.0 x 1.5
VMO NW 06 HL	L	PN 250	8	M 12 x 1.5	17,0	12,0	25,0	10,0	17	17	9.3 x 2.4
VMO NW 08 HL	L	PN 250	10	M 14 x 1.5	19,0	12,0	26,0	11,0	19	19	11.3 x 2.4
VMO NW 10 HL	L	PN 250	12	M 16 x 1.5	22,0	12,0	27,0	12,5	22	22	13.3 x 2.4
VMO NW 13 HL	L	PN 250	15	M 18 x 1.5	24,0	12,0	29,0	13,5	24	27	15.3 x 2.4
VMO NW 16 HL	L	PN 160	18	M 22 x 1.5	27,0	14,0	32,0	14,5	27	32	19.3 x 2.4
VMO NW 20 HL	L	PN 160	22	M 26 x 1.5	31,0	16,0	34,0	16,5	32	36	23.3 x 2.4
VMO NW 20 HL 27	L	PN 160	22	M 27 x 2	32,0	16,0	33,0	16,5	32	36	23.6 x 2.9
VMO NW 25 HL	L	PN 100	28	M 33 x 2	41,0	18,0	34,0	17,5	41	41	29.5 x 3.0
VMO NW 32 HL	L	PN 100	35	M 42 x 2	50,0	20,0	39,0	17,5	50	50	38.0 x 3.0
VMO NW 40 HL	L	PN 160	42	M 48 x 2	55,0	17,5	42,0	19,0	55	60	44.60 x 3.00
VMO NW 03 HS	S	PN 630	6	M 12 x 1.5	17,0	12,0	28,0	13,0	17	17	9.3 x 2.4
VMO NW 04 HS	S	PN 630	8	M 14 x 1.5	19,0	12,0	30,0	15,0	19	19	11.3 x 2.4
VMO NW 06 HS	S	PN 630	10	M 16 x 1.5	22,0	12,0	31,0	15,0	22	22	13.3 x 2.4
VMO NW 08 HS	S	PN 630	12	M 18 x 1.5	24,0	12,0	33,0	17,0	24	24	15.3 x 2.4
VMO NW 13 HS	S	PN 400	16	M 22 x 1.5	27,0	14,0	37,0	18,5	27	30	19.3 x 2.4
VMO NW 16 HS	S	PN 400	20	M 27 x 2	32,0	16,0	41,0	20,5	32	36	23.5 x 3.0
VMO NW 20 HS	S	PN 400	25	M 33 x 2	41,0	18,0	47,0	23,0	41	46	29.5 x 3.0
VMO NW 25 HS	S	PN 250	30	M 42 x 2	50,0	20,0	50,0	23,5	50	50	38.0 x 3.0
VMO NW 32 HS	S	PN 315	38	M 48 x 2	55,0	21,5	57,0	26,0	55	60	44.6 x 2.9

Series: LL = Very light L = Light S = Heavy – PN = Nominal pressure PB = Max. operating pressure – Ø = External pipe diameter

Product versions

XVMO

Despite careful checking, we cannot guarantee the accuracy of all information included on this site, and we accept no liability.