VN
Screw-in fitting

HANSA-FLEX

Properties

Connection 1	NPT external threads
Sealing form 1	thread seal
Connection 2	metric cylindrical outer thread
Sealing form 2	24° inner cone
Design	Screw-in fitting
Construction	straight
Standard	DIN 2353 ISO 8434-1
Scope of supply	Socket with union nut and cutting ring
Material	Steel
Surface	electro galvanised



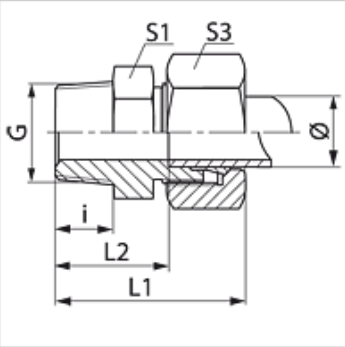

Note

Information about fitting, installation, pressure loads and permissible operating temperatures can be found in the technical information for pipe fittings.

Item

Identification	Series	Operating pressure	External pipe Ø (mm)	G	i (mm)	L1 (mm)	L2 (mm)	S1	S3
VN 04 LL	LL	PN 100	4	1/8" -27 NPT	10,0	28,0	18,0	11	10
VN 05 LL	LL	PN 100	5	1/8" -27 NPT	10,0	28,0	16,5	11	12
VN 06 LL	LL	PN 100	6	1/8" -27 NPT	10,0	28,0	16,5	11	12
VN 08 LL	LL	PN 100	8	1/8" -27 NPT	10,0	30,0	18,5	12	14
VN NW 04 HL	L	PN 315	6	1/8" -27 NPT	10,0	32,0	17,0	12	14
VN NW 04 HL 1/4	L	PN 315	6	1/4" -18 NPT	15,0	38,0	23,0	17	14
VN NW 04 HL 3/8	L	PN 315	6	3/8" -18 NPT	15,0	39,0	24,0	19	14
VN NW 04 HL 1/2	L	PN 315	6	1/2" -14 NPT	20,0	44,0	29,0	24	14
VN NW 06 HL 1/8	L	PN 315	8	1/8" -27 NPT	10,0	38,0	23,0	12	17
VN NW 06 HL	L	PN 315	8	1/4" -18 NPT	15,0	38,0	23,0	17	17
VN NW 06 HL 3/8	L	PN 315	8	3/8" -18 NPT	15,5	39,0	24,0	19	17
VN NW 06 HL 1/2	L	PN 315	8	1/2" -14 NPT	20,0	44,0	29,0	24	17
VN NW 08 HL 1/8	L	PN 315	10	1/8" -27 NPT	15,5	39,5	25,0	17	19
VN NW 08 HL	L	PN 315	10	1/4" -18 NPT	15,0	39,0	24,0	17	19
VN NW 08 HL 3/8	L	PN 315	10	3/8" -18 NPT	15,2	40,0	25,0	19	19
VN NW 08 HL 1/2	L	PN 315	10	1/2" -14 NPT	20,0	45,0	30,0	24	19
VN NW 10 HL 1/8	L	PN 315	12	1/8" -27 NPT	15,0	40,0	25,0	19	22
VN NW 10 HL 1/4	L	PN 315	12	1/4" -18 NPT	15,0	40,0	25,0	19	22
VN NW 10 HL	L	PN 315	12	3/8" -18 NPT	15,5	40,0	25,0	19	22
VN NW 10 HL 1/2	L	PN 315	12	1/2" -14 NPT	20,0	45,0	30,0	24	22
VN NW 10 HL 3/4	L	PN 315	12	3/4" -14 NPT	20,0	45,0	32,0	27	22
VN NW 13 HL 1/4	L	PN 315	15	1/4" -18 NPT	15,0	40,0	25,0	24	22
VN NW 13 HL 3/8	L	PN 315	15	3/8" -18 NPT	15,5	41,5	26,5	24	27
VN NW 13 HL	L	PN 315	15	1/2" -14 NPT	20,0	46,0	31,0	24	27
VN NW 13 HL 3/4	L	PN 315	15	3/4" -14 NPT	20,0	46,0	32,0	27	27
VN NW 16 HL 1/4	L	PN 315	18	1/4" -18 NPT	15,0	32,0	25,0	27	32
VN NW 16 HL	L	PN 315	18	1/2" -14 NPT	20,0	48,0	31,5	27	32
VN NW 16 HL 3/4	L	PN 315	18	3/4" -14 NPT	20,0	48,5	32,0	27	32
VN NW 20 HL 1/2	L	PN 160	22	1/2" -14 NPT	20,0	50,0	33,5	32	36
VN NW 20 HL	L	PN 160	22	3/4" -14 NPT	20,0	50,0	33,5	32	36
VN NW 25 HL	L	PN 160	28	1" -11.5 NPT	25,0	56,0	39,5	41	41
VN NW 32 HL 1	L	PN 160	35	1" -11.5 NPT	25,0	62,0	40,5	46	50
VN NW 32 HL	L	PN 160	35	1.1/4" -11.5 NPT	25,5	62,0	40,5	46	50
VN NW 40 HL	L	PN 160	42	1.1/2" -11.5 NPT	26,0	65,0	42,0	55	60
VN NW 03 HS	S	PN 630	6	1/4" -18 NPT	15,0	43,0	28,0	17	17
VN NW 03 HS 1/2	S	PN 630	6	1/2" -14 NPT	20,0	50,0	35,0	24	17
VN NW 04 HS	S	PN 630	8	1/4" -18 NPT	15,0	43,0	28,0	17	19
VN NW 04 HS 3/8	S	PN 630	8	3/8" -18 NPT	15,5	43,0	28,0	19	19
VN NW 06 HS 1/4	S	PN 630	10	1/4" -18 NPT	15,0	44,0	27,5	19	22
VN NW 06 HS	S	PN 630	10	3/8" -18 NPT	15,5	44,0	27,5	19	22

Despite careful checking, we cannot guarantee the accuracy of all information included on this site, and we accept no liability.

Item

Identification	Series	Operating pressure	External pipe Ø (mm)	G	i (mm)	L1 (mm)	L2 (mm)	S1	S3
VN NW 06 HS 1/2	S	PN 400	10	1/2" -14 NPT	20,0	51,0	34,5	24	22
VN NW 08 HS 1/4	S	PN 630	12	1/4" -18 NPT	15,1	46,0	29,5	22	24
VN NW 08 HS	S	PN 630	12	3/8" -18 NPT	15,5	46,0	29,5	22	24
VN NW 08 HS 1/2	S	PN 630	12	1/2" -14 NPT	20,0	51,0	34,5	24	24
VN NW 10 HS 3/8	S	PN 630	14	3/8" -18 NPT	15,5	54,0	36,0	24	27
VN NW 10 HS	S	PN 630	14	1/2" -14 NPT	20,0	54,0	36,0	24	27
VN NW 13 HS	S	PN 400	16	1/2" -14 NPT	20,0	54,0	35,5	27	30
VN NW 13 HS 3/4	S	PN 400	16	3/4" -14 NPT	20,0	56,0	37,5	32	30
VN NW 16 HS 1/2	S	PN 400	20	1/2" -14 NPT	20,0	59,0	37,5	32	30
VN NW 16 HS	S	PN 400	20	3/4" -14 NPT	20,0	59,0	37,5	32	36
VN NW 16 HS 1	S	PN 400	20	1" -11.5 NPT	25,0	66,0	44,5	41	36
VN NW 20 HS 3/4	S	PN 400	25	3/4" -14 NPT	20,0	64,0	40,0	41	46
VN NW 20 HS	S	PN 400	25	1" -11.5 NPT	25,0	69,0	45,0	41	46
VN NW 20 HS 1 1/4	S	PN 400	25	1.1/4" -11.5 NPT	25,5	69,0	45,5	46	46
VN NW 25 HS 1	S	PN 400	30	1" -11.5 NPT	25,0	66,5	40,0	46	50
VN NW 25 HS	S	PN 400	30	1.1/4" -11.5 NPT	25,5	73,0	46,5	46	50
VN NW 32 HS	S	PN 315	38	1.1/2" -11.5 NPT	26,0	80,0	49,0	55	60

Series: LL = Very light L = Light S = Heavy – PN = Nominal pressure PB = Max. operating pressure – Ø = External pipe diameter

Product versions

VN MG	Screw in fitting, Brass
VN VA	Screw in fitting, Stainless steel
XVN	Screw-in fitting, Steel

Despite careful checking, we cannot guarantee the accuracy of all information included on this site, and we accept no liability.