SV HF

Bulkhead fitting, French series

Properties

Connection 1 + 2	metric cylindrical outer thread
Sealing form 1 + 2	24° inner cone
Design	Bulkhead fitting
Construction type	French series
Construction	straight
Scope of supply	Socket with union nut and cutting ring
Material	Steel
Surface	electro galvanised



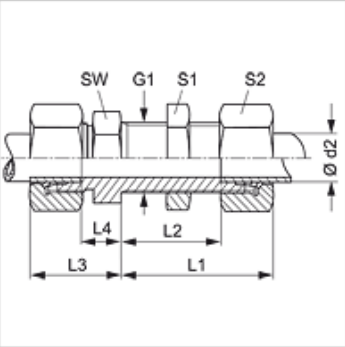

Note

Information about fitting, installation, pressure loads and permissible operating temperatures can be found in the technical information for pipe fittings.

Item

Identification	Operating pressure	Ø d2 (mm)	G1	L1 (mm)	L2 (mm)	L3 (mm)	L4 (mm)	AF (mm)	S1	S2
SV NW 10 HF	PN 400	13,25	M 20 x 1.5	47,5	25	32,5	10	27	27	27
SV NW 13 HF	PN 250	16,75	M 24 x 1.5	49,5	26	34,5	11	30	30	30
SV NW 16 HF	PN 250	21,25	M 30 x 1.5	52,0	28	37,0	13	36	36	36
SV NW 20 HF	PN 160	26,75	M 36 x 1.5	54,0	29	40,0	15	42	42	42
SV NW 25 HF	PN 160	33,50	M 45 x 1.5	58,0	33	44,0	19	55	55	55

Series: LL = Very light L = Light S = Heavy – PN = Nominal pressure PB = Max. operating pressure – Ø d2 = External pipe diameter

Despite careful checking, we cannot guarantee the accuracy of all information included on this site, and we accept no liability.