# V HF
Fitting, French series

HANSA-FLEX

## Properties

| | |
|---|---|
| **Connection 1 + 2** | metric cylindrical outer thread |
| **Sealing form 1 + 2** | 24° inner cone |
| **Design** | Fitting |
| **Construction type** | French series |
| **Construction** | straight |
| **Scope of supply** | Socket with union nut and cutting ring |
| **Material** | Steel |
| **Surface** | electro galvanised |



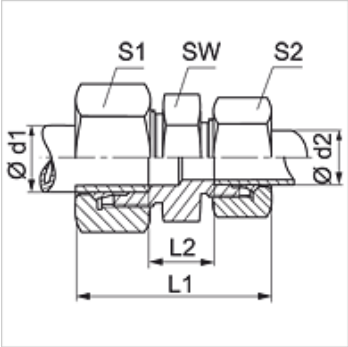


## Note

Information about fitting, installation, pressure loads and permissible operating temperatures can be found in the technical information for pipe fittings.

## Item

| Identification | Operating pressure | Ø d1 (mm) | Ø d2 (mm) | L1 (mm) | L2 (mm) | AF (mm) | S1 | S2 |
|---|---|---|---|---|---|---|---|---|
| **V NW 10 HF** | PN 400 | 13,25 | 13,25 | 58,0 | 13 | 22 | 27 | 27 |
| **V NW 13 HF 10** | PN 250 | 16,75 | 13,25 | 60,0 | 14 | 27 | 30 | 27 |
| **V NW 13 HF** | PN 250 | 16,75 | 16,75 | 61,0 | 14 | 27 | 30 | 30 |
| **V NW 16 HF 13** | PN 250 | 21,25 | 16,75 | 64,5 | 17 | 32 | 36 | 30 |
| **V NW 16 HF** | PN 250 | 21,25 | 21,25 | 67,0 | 19 | 32 | 36 | 36 |
| **V NW 20 HF 13** | PN 250 | 26,75 | 16,75 | 66,5 | 18 | 41 | 42 | 30 |
| **V NW 20 HF** | PN 250 | 26,75 | 26,75 | 70,0 | 20 | 36 | 42 | 42 |
| **V NW 25 HF 16** | PN 160 | 33,50 | 21,25 | 73,0 | 24 | 46 | 55 | 36 |
| **V NW 25 HF 20** | PN 160 | 33,50 | 26,75 | 74,0 | 24 | 46 | 55 | 42 |
| **V NW 25 HF** | PN 160 | 33,50 | 33,50 | 76,0 | 26 | 46 | 55 | 55 |

Series: LL = Very light  L = Light  S = Heavy – PN = Nominal pressure  PB = Max. operating pressure – Ø d2 = External pipe diameter

*Despite careful checking, we cannot guarantee the accuracy of all information included on this site, and we accept no liability.*