VEW HF

Fitting, angle 90°, French series

Properties

Connection 1	metric nut thread
Sealing form 1	24° outer cone
Connection 2	metric cylindrical outer thread
Sealing form 2	24° inner cone
Design	Adjustable direction fitting
Construction type	French series
Construction	Angle 90°
Scope of supply	Socket with union nut and cutting ring
Material	Steel
Surface	electro galvanised



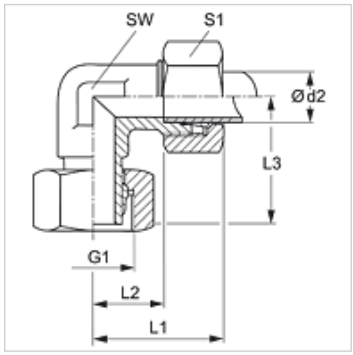

Note

Information about fitting, installation, pressure loads and permissible operating temperatures can be found in the technical information for pipe fittings.

Item

Identification	Operating pressure	Ø d2 (mm)	G1	L1 (mm)	L2 (mm)	L3 (mm)	AF (mm)	S1
VEW NW 10 HF	PN 300	13,25	M 20 x 1.5	25	16	30,5	19	27
VEW NW 13 HF	PN 300	16,75	M 24 x 1.5	27	18	32,5	24	30
VEW NW 16 HF	PN 200	21,25	M 30 x 1.5	32	23	36,5	30	36
VEW NW 20 HF	PN 200	26,75	M 36 x 1.5	36	27	41,0	36	46
VEW NW 25 HF	PN 160	33,50	M 45 x 1.5	44	35	47,5	46	55

Series: LL = Very light L = Light S = Heavy – PN = Nominal pressure PB = Max. operating pressure – Ø d2 = External pipe diameter

Despite careful checking, we cannot guarantee the accuracy of all information included on this site, and we accept no liability.