VU
Screw-in fitting

HANSA-FLEX

Properties

Connection 1	UN/UNF external threads
Sealing form 1	Shape F
Connection 2	metric cylindrical outer thread
Sealing form 2	24° inner cone
Design	Screw-in fitting
Construction	straight
Standard	DIN 2353 ISO 8434-1
Scope of supply	Socket with union nut and cutting ring
Material	Steel
Surface	electro galvanised



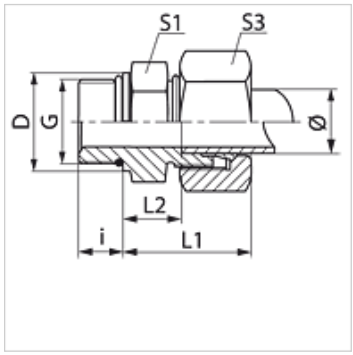

Note

Information about fitting, installation, pressure loads and permissible operating temperatures can be found in the technical information for pipe fittings.

Item

Identification	Series	Operating pressure	External pipe Ø (mm)	G	D (mm)	i (mm)	L1 (mm)	L2 (mm)	S1	S3	OR
VU NW 04 HL 7/16	L	PN 315	6	7/16"-20 UNF	17,0	9	23,0	8,5	14	16	8.92 x 1.83
VU NW 04 HL 1/2	L	PN 315	6	1/2"-20 UNF	17,0	9	23,0	8,5	17	17	10.52 x 1.83
VU NW 04 HL 9/16	L	PN 315	6	9/16"-18 UNF	17,6	10	35,0	10,0	19	14	11.90 x 1.98
VU NW 06 HL 7/16	L	PN 315	8	7/16"-20 UNF	14,4	9	28,0	13,0	17	17	8.92 x 1.83
VU NW 06 HL 1/2	L	PN 315	8	1/2"-20 UNF	17,0	9	25,0	10,0	17	17	10.52 x 1.83
VU NW 06 HL 9/16	L	PN 315	8	9/16"-18 UNF	19,0	10	25,0	10,0	17	17	11.90 x 1.98
VU NW 08 HL 7/16	L	PN 315	10	7/16"-20 UNF	14,4	9	29,0	14,0	17	19	8.92 x 1.83
VU NW 08 HL 9/16	L	PN 315	10	9/16"-18 UNF	19,0	10	26,0	11,0	19	19	16.36 x 2.20
VU NW 08 HL 3/4	L	PN 315	10	3/4"-16 UNF	22,3	11	26,0	11,0	24	19	16.36 x 2.20
VU NW 10 HL 9/16	L	PN 315	12	9/16"-18 UNF	17,6	10	27,0	12,0	19	22	11.90 x 1.98
VU NW 10 HL 3/4	L	PN 315	12	3/4"-16 UNF	22,3	11	28,0	13,0	24	22	16.36 x 2.20
VU NW 10 HL 7/8	L	PN 315	12	7/8"-14 UNF	25,5	13	29,0	14,0	27	22	19.18 x 2.46
VU NW 13 HL 9/16	L	PN 315	15	9/16"-18 UNF	17,6	10	29,0	14,0	27	27	11.90 x 1.98
VU NW 13 HL 3/4	L	PN 315	15	3/4"-16 UNF	22,3	11	29,0	14,0	24	27	16.36 x 2.20
VU NW 13 HL 7/8	L	PN 315	15	7/8"-14 UNF	25,5	13	30,5	15,5	27	27	19.18 x 2.46
VU NW 16 HL 3/4	L	PN 315	18	3/4"-16 UNF	22,3	11	29,5	14,5	27	32	16.36 x 2.20
VU NW 16 HL 7/8	L	PN 315	18	7/8"-14 UNF	25,5	13	29,5	14,5	27	32	19.18 x 2.46
VU NW 16 HL 1 1/16	L	PN 315	18	1.1/16" -12 UN	31,9	15	29,5	14,5	32	32	23.47 x 2.95
VU NW 20 HL 7/8	L	PN 160	22	7/8"-14 UNF	25,5	13	33,0	16,5	32	36	19.18 x 2.46
VU NW 20 HL 1 1/16	L	PN 160	22	1.1/16" -12 UN	31,9	15	33,0	16,5	32	36	23.47 x 2.95
VU NW 20 HL 1 5/16	L	PN 160	22	1.5/16" -12 UN	38,2	15	34,0	17,5	41	36	29.74 x 2.95
VU NW 25 HL 7/8	L	PN 160	22	7/8"-14 UNF	25,5	14	34,0	17,5	32	41	19.18 x 2.46
VU NW 25 HL 1 1/16	L	PN 160	28	1.1/16" -12 UN	31,9	15	34,0	17,5	41	41	23.47 x 2.95
VU NW 25 HL 1 5/16	L	PN 160	28	1.5/16" -12 UN	38,2	15	34,0	17,5	41	41	29.74 x 2.95
VU NW 32 HL 1 5/16	L	PN 160	35	1.5/16" -12 UN	38,2	15	39,0	17,5	50	46	29.74 x 2.95
VU NW 32 HL 1 5/8	L	PN 160	35	1.5/8" -12 UN	50,0	15	39,0	17,5	50	48	37.47 x 3.00
VU NW 40 HL 1 5/8	L	PN 160	42	1.5/8" -12 UN	55,0	15	42,0	19,0	60	48	37.47 x 3.00
VU NW 40 HL 1 7/8	L	PN 160	42	1.7/8" -12 UN	55,0	15	42,0	19,0	60	55	43.69 x 3.00
VU NW 03 HS 7/16	S	PN 630	6	7/16"-20 UNF	17,0	9	30,0	15,0	17	16	8.92 x 1.83
VU NW 04 HS 7/16	S	PN 630	8	7/16"-20 UNF	14,4	9	30,0	15,0	17	19	8.92 x 1.83
VU NW 04 HS 1/2	S	PN 630	8	1/2"-20 UNF	17,0	9	30,0	15,0	19	17	10.52 x 1.83
VU NW 04 HS 9/16	S	PN 630	8	9/16"-18 UNF	17,6	10	30,0	15,0	19	17	11.90 x 1.98
VU NW 06 HS 9/16	S	PN 630	10	9/16"-18 UNF	17,6	10	31,0	14,5	19	22	11.90 x 1.98
VU NW 06 HS 3/4	S	PN 630	10	3/4"-16 UNF	22,3	11	31,0	14,5	24	22	16.36 x 2.20
VU NW 08 HS 9/16	S	PN 630	12	9/16"-18 UNF	17,6	10	31,0	14,5	22	24	11.90 x 1.98
VU NW 08 HS 3/4	S	PN 630	12	3/4"-16 UNF	22,3	11	34,0	17,5	24	24	16.36 x 2.20
VU NW 08 HS 7/8	S	PN 630	12	7/8"-14 UNF	25,5	13	37,0	18,5	27	24	19.18 x 2.46
VU NW 10 HS 3/4	S	PN 630	14	3/4"-16 UNF	22,3	11	34,0	16,0	27	24	16.36 x 2.20
VU NW 13 HS 3/4	S	PN 400	16	3/4"-16 UNF	22,3	11	34,0	15,5	24	30	16.36 x 2.20
VU NW 13 HS 7/8	S	PN 400	16	7/8"-14 UNF	25,5	13	37,0	18,5	27	30	19.18 x 2.46
VU NW 13 HS 1 1/16	S	PN 400	16	1.1/16" -12 UN	31,9	15	37,0	18,5	32	30	23.47 x 2.95

Despite careful checking, we cannot guarantee the accuracy of all information included on this site, and we accept no liability.

Item

Identification	Series	Operating pressure	External pipe Ø (mm)	G	D (mm)	i (mm)	L1 (mm)	L2 (mm)	S1	S3	OR
VU NW 16 HS 3/4	S	PN 400	20	3/4"-16 UNF	22,3	11	42,0	20,5	32	36	16.36 x 2.20
VU NW 16 HS 7/8	S	PN 400	20	7/8"-14 UNF	25,5	13	42,0	20,5	32	36	19.18 x 2.46
VU NW 16 HS 1 1/16	S	PN 400	20	1.1/16" -12 UN	31,9	15	42,0	20,5	32	36	23.47 x 2.95
VU NW 20 HS 1 1/16	S	PN 400	25	1.1/16" -12 UN	31,9	15	47,0	23,0	41	46	23.47 x 2.95
VU NW 20 HS 1 5/16	S	PN 400	25	1.5/16" -12 UN	38,2	15	47,0	23,0	41	46	29.74 x 2.95
VU NW 25 HS 1 5/16	S	PN 400	30	1.5/16" -12 UN	38,2	15	50,0	23,5	46	50	29.74 x 2.95
VU NW 25 HS 1 5/8	S	PN 400	30	1.5/8" -12 UN	47,7	15	50,0	23,5	50	50	37.47 x 3.00
VU NW 32 HS 1 5/8	S	PN 315	38	1.5/8" -12 UN	54,0	15	42,0	19,0	55	60	37.47 x 3.00
VU NW 32 HS 1 7/8	S	PN 315	38	1.7/8" -12 UN	55,0	15	57,0	26,0	60	55	43.69 x 3.00

Series: LL = Very light L = Light S = Heavy – PN = Nominal pressure PB = Max. operating pressure – Ø = External pipe diameter

Product versions

VU VA	Screw in fitting, Stainless steel
XVU	Screw-in fitting, Steel

Despite careful checking, we cannot guarantee the accuracy of all information included on this site, and we accept no liability.