KM JF VA
Counter nut

Properties

Connection 1	ORFS inner thread
Design	Counter nut
Standard	ISO 8434-2
Material	Stainless steel

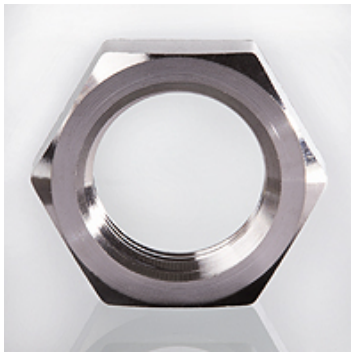

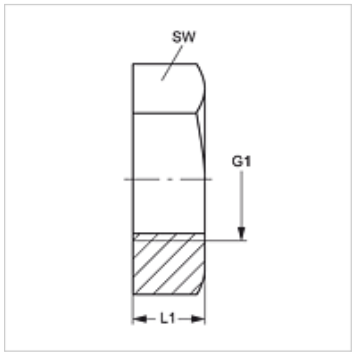

Item

Identification	G1	L1 (mm)	AF (mm)
KM 04 JF VA	9/16"-18 UNF	7	22
KM 06 JF VA	11/16" -16 UN	8	27
KM 08 JF VA	13/16" -16 UN	9	30
KM 10 JF VA	1" -14 UNS	11	32

AF = Width across flats

Product versions

KM JF	Counter nut, Steel

Despite careful checking, we cannot guarantee the accuracy of all information included on this site, and we accept no liability.