XGAM
Screw-on fitting

HANSA-FLEX

Properties

Connection 1	metric cylindrical inner thread
Sealing form 1	Shape A
Connection 2	metric cylindrical outer thread
Sealing form 2	24° inner cone
Design	Screw-on fitting
Construction	straight
Standard	DIN 2353 ISO 8434-1
Scope of supply	Socket (without union nut and cutting ring)
Material	Steel
Surface	electro galvanised



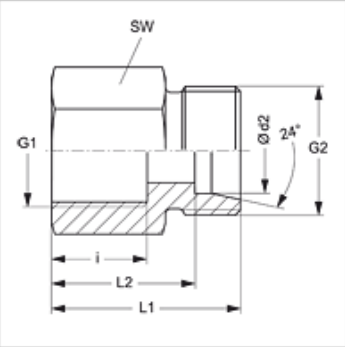

Note

Information about fitting, installation, pressure loads and permissible operating temperatures can be found in the technical information for pipe fittings.

Item

Identification	Series	Operating pressure	Ø d2 (mm)	G1	G2	i (mm)	L1 (mm)	L2 (mm)	AF (mm)
XGAM NW 04 HL	L	PN 315	6	M 10 x 1	M 12 x 1.5	12,5	26,5	19,5	14
XGAM NW 04 HL 22	L	PN 315	6	M 22 x 1.5	M 12 x 1.5	19,0	35,0	28,0	27
XGAM NW 06 HL	L	PN 315	8	M 12 x 1.5	M 14 x 1.5	17,0	31,0	24,0	17
XGAM NW 06 HL 22	L	PN 315	8	M 22 x 1.5	M 14 x 1.5	19,0	35,0	29,0	27
XGAM NW 08 HL	L	PN 315	10	M 14 x 1.5	M 16 x 1.5	17,0	32,0	25,0	19
XGAM NW 08 HL 22	L	PN 315	10	M 22 x 1.5	M 16 x 1.5	19,0	36,0	29,0	27
XGAM NW 10 HL	L	PN 315	12	M 16 x 1.5	M 18 x 1.5	17,0	33,0	26,0	22
XGAM NW 10 HL 18	L	PN 315	12	M 18 x 1.5	M 18 x 1.5	17,0	34,0	27,0	24
XGAM NW 10 HL 22	L	PN 315	12	M 22 x 1.5	M 18 x 1.5	19,0	36,0	29,0	27
XGAM NW 13 HL	L	PN 315	15	M 18 x 1.5	M 22 x 1.5	17,0	35,0	28,0	24
XGAM NW 13 HL 22	L	PN 315	15	M 22 x 1.5	M 22 x 1.5	19,0	37,0	30,0	27
XGAM NW 16 HL	L	PN 315	18	M 22 x 1.5	M 26 x 1.5	19,0	37,0	29,5	27
XGAM NW 20 HL	L	PN 160	22	M 26 x 1.5	M 30 x 2	21,0	42,0	34,5	32
XGAM NW 25 HL	L	PN 160	28	M 33 x 2	M 36 x 2	24,0	45,0	37,5	41
XGAM NW 32 HL	L	PN 160	35	M 42 x 2	M 45 x 2	26,0	51,0	40,5	55
XGAM NW 40 HL	L	PN 160	42	M 48 x 2	M 52 x 2	28,0	53,0	42,0	60
XGAM NW 03 HS	S	PN 400	6	M 12 x 1.5	M 14 x 1.5	17,0	33,0	26,0	17
XGAM NW 04 HS	S	PN 400	8	M 14 x 1.5	M 16 x 1.5	17,0	33,0	26,0	19
XGAM NW 06 HS	S	PN 400	10	M 16 x 1.5	M 18 x 1.5	17,0	34,0	26,5	22
XGAM NW 08 HS	S	PN 400	12	M 18 x 1.5	M 20 x 1.5	17,0	35,0	27,5	24
XGAM NW 10 HS	S	PN 400	14	M 20 x 1.5	M 22 x 1.5	19,0	39,0	31,0	27
XGAM NW 13 HS	S	PN 400	16	M 22 x 1.5	M 24 x 1.5	19,0	39,0	30,5	30
XGAM NW 16 HS	S	PN 315	20	M 27 x 2	M 30 x 2	22,0	45,0	34,5	36
XGAM NW 20 HS	S	PN 315	25	M 33 x 2	M 36 x 2	24,0	49,0	37,0	41
XGAM NW 25 HS	S	PN 315	30	M 42 x 2	M 42 x 2	26,0	55,0	41,5	55
XGAM NW 32 HS	S	PN 250	38	M 48 x 2	M 52 x 2	28,0	59,0	43,0	60

Series: LL = Very light L = Light S = Heavy – PN = Nominal pressure PB = Max. operating pressure – Ø d2 = External pipe diameter

Product versions

XGAM VA	Screw-on fitting, Stainless steel
GAM	Screw-on fitting, Steel

Despite careful checking, we cannot guarantee the accuracy of all information included on this site, and we accept no liability.