UEM AJF VA
Union nut AJF

Properties

Connection 1	ORFS nut threads
Sealing form 1	flat sealing
Design	Union nut
Standard	ISO 8434-3
Material	Stainless steel

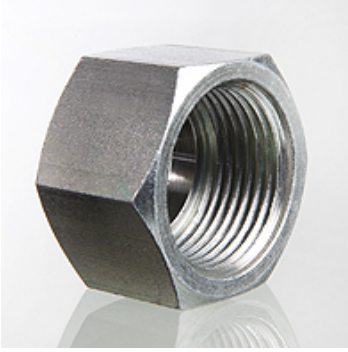

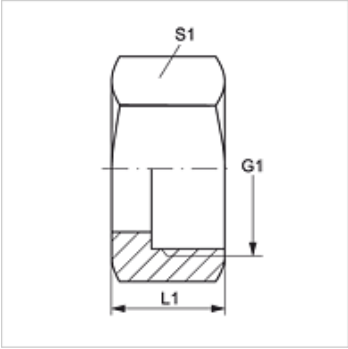

Item

Identification	G1	L1 (mm)	S1
UEM AJF 04 VA	9/16"-18 UNF	14,5	17
UEM AJF 06 VA	11/16" -16 UN	17,0	22
UEM AJF 08 VA	13/16" -16 UN	21,0	24
UEM AJF 10 VA	1" -14 UNS	23,5	30
UEM AJF 12 VA	1.3/16" -12 UN	26,0	36
UEM AJF 16 VA	1.7/16" -12 UN	28,0	41
UEM AJF 20 VA	1.11/16" -12 UN	28,0	50
UEM AJF 24 VA	2" -12 UN	28,0	60

SW, S1, S2 = With across flats

Product versions

UEM AJF	Union nut AJF, Steel

Despite careful checking, we cannot guarantee the accuracy of all information included on this site, and we accept no liability.