SW 45 HJ

Bulkhead fitting socket, angle 45°

Properties

Connection 1	UN/UNF external threads
Sealing form 1	74° outer cone
Connection 2	UN/UNF external threads
Sealing form 2	74° outer cone
Design	Bulkhead fitting socket
Construction	Angle 45°
Material	Steel
Surface	electro galvanised



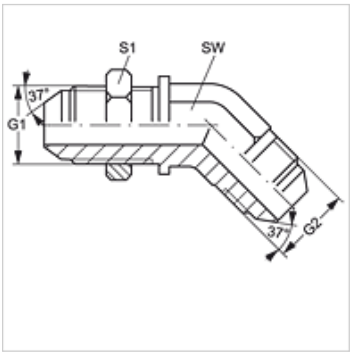

Item

Identification	G1 + G2	AF (mm)	S1
SW 45 HJ 04	7/16"-20 UNF	11	17
SW 45 HJ 05	1/2"-20 UNF	14	19
SW 45 HJ 06	9/16"-18 UNF	14	21
SW 45 HJ 08	3/4"-16 UNF	19	25
SW 45 HJ 10	7/8"-14 UNF	22	29
SW 45 HJ 12	1.1/16" -12 UN	27	35
SW 45 HJ 16	1.5/16" -12 UN	33	41
SW 45 HJ 20	1.5/8" -12 UN	41	48
SW 45 HJ 24	1.7/8" -12 UN	48	55

SW, S1, S2 = With across flats

Product versions

SW 45 HJ VA	Bulkhead fitting socket, angle 45°, Stainless steel

Despite careful checking, we cannot guarantee the accuracy of all information included on this site, and we accept no liability.