SW 90 HJ VA

Bulkhead fitting socket, angle 90°

Properties

Connection 1	UN/UNF external threads
Sealing form 1	74° outer cone
Connection 2	UN/UNF external threads
Sealing form 2	74° outer cone
Design	Bulkhead fitting socket
Construction	Angle 90°
Material	Stainless steel



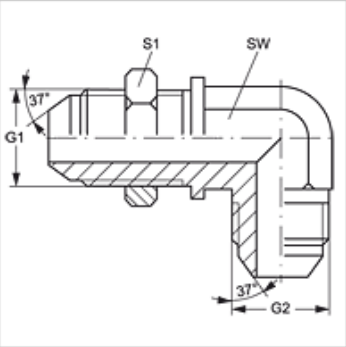

Item

Identification	G1 + G2	AF (mm)	S1
SW 90 HJ 04 VA	7/16"-20 UNF	11	17
SW 90 HJ 06 VA	9/16"-18 UNF	14	22
SW 90 HJ 08 VA	3/4"-16 UNF	19	24
SW 90 HJ 10 VA	7/8"-14 UNF	22	30
SW 90 HJ 12 VA	1.1/16" -12 UN	27	36

SW, S1, S2 = With across flats

Product versions

SW 90 HJ	Bulkhead fitting socket, angle 90°, Steel

Despite careful checking, we cannot guarantee the accuracy of all information included on this site, and we accept no liability.