XSE VA
Bulkhead socket weld fitting

Properties

Connection 1	metric cylindrical outer thread
Sealing form 1	24° inner cone
Connection 2	metric cylindrical outer thread
Sealing form 2	24° inner cone
Design	Bulkhead socket weld fitting
Construction	straight
Standard	DIN 3912
Scope of supply	Socket (without union nut and cutting ring)
Material	Stainless steel



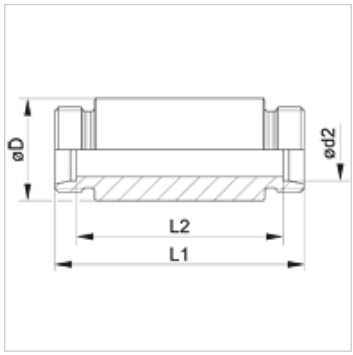

Note

Information about fitting, installation, pressure loads and permissible operating temperatures can be found in the technical information for pipe fittings.

Item

Identification	Series	Operating pressure	Ø d2 (mm)	Ø D (mm)	L1 (mm)	L2 (mm)
XSE NW 04 HL VA	L	PN 315	6	18,0	70	56
XSE NW 06 HL VA	L	PN 315	8	20,0	70	56
XSE NW 08 HL VA	L	PN 315	10	22,0	72	58
XSE NW 10 HL VA	L	PN 315	12	25,0	72	58
XSE NW 13 HL VA	L	PN 315	15	28,0	84	70
XSE NW 16 HL VA	L	PN 315	18	32,0	84	69
XSE NW 20 HL VA	L	PN 160	22	36,0	88	73
XSE NW 25 HL VA	L	PN 160	28	40,0	88	73
XSE NW 32 HL VA	L	PN 160	35	50,0	92	71
XSE NW 40 HL VA	L	PN 160	42	60,0	92	70
XSE NW 03 HS VA	S	PN 630	6	20,0	74	60
XSE NW 04 HS VA	S	PN 630	8	22,0	74	60
XSE NW 06 HS VA	S	PN 630	10	25,0	74	59
XSE NW 08 HS VA	S	PN 630	12	28,0	74	59
XSE NW 10 HS VA	S	PN 630	14	30,0	88	72
XSE NW 13 HS VA	S	PN 400	16	35,0	88	71
XSE NW 16 HS VA	S	PN 400	20	38,0	92	71
XSE NW 20 HS VA	S	PN 400	25	45,0	96	72
XSE NW 25 HS VA	S	PN 400	30	50,0	100	73
XSE NW 32 HS VA	S	PN 315	38	60,0	104	72

Series: LL = Very light L = Light S = Heavy – PN = Nominal pressure PB = Max. operating pressure – Ø d2 = External pipe diameter

Product versions

XSE	Bulkhead socket weld fitting, Steel
SE VA	Bulkhead socket weld fitting, Stainless steel

Despite careful checking, we cannot guarantee the accuracy of all information included on this site, and we accept no liability.