W90 HJ LOET

Soldered socket, angle 90°

HANSA-FLEX

Properties

Connection 1	UN/UNF external threads
Sealing form 1	74° outer cone
Connection 2	Push-on soldered connection
Design	Soldered socket
Construction	Angle 90°
Material	Steel
Surface	oiled



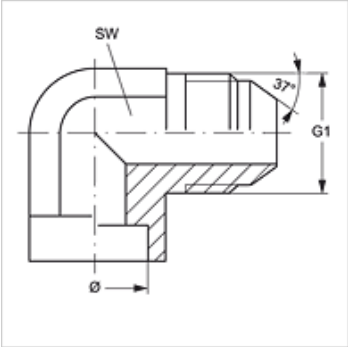

Item

Identification	External pipe Ø (mm)	G1	AF (mm)
W90 HJ 04 LOET 06	6	7/16"-20 UNF	11
W90 HJ 05 LOET 10	10	1/2"-20 UNF	13
W90 HJ 06 LOET 10	10	9/16"-18 UNF	19
W90 HJ 06 LOET 12	12	9/16"-18 UNF	19
W90 HJ 08 LOET 12	12	3/4"-16 UNF	19
W90 HJ 08 LOET 16	16	3/4"-16 UNF	19
W90 HJ 10 LOET 14	14	7/8" -14 UNF	22
W90 HJ 10 LOET 16	16	7/8" -14 UNF	22
W90 HJ 10 LOET 18	18	7/8" -14 UNF	22
W90 HJ 10 LOET 22	22	7/8" -14 UNF	27
W90 HJ 12 LOET 18	18	1.1/16" -12 UN	27
W90 HJ 12 LOET 20	20	1.1/16" -12 UN	27
W90 HJ 12 LOET 25	25	1.1/16" -12 UN	33
W90 HJ 16 LOET 25	25	1.5/16" -12 UN	33
W90 HJ 16 LOET 32	32	1.1/16" -12 UN	45
W90 HJ 20 LOET 30	30	1.5/8" -12 UN	41
W90 HJ 20 LOET 32	32	1.5/8" -12 UN	41
W90 HJ 20 LOET 38	38	1.5/8" -12 UN	45
W90 HJ 24 LOET 38	38	1.7/8" -12 UN	48

Ø = External pipe diameter

Despite careful checking, we cannot guarantee the accuracy of all information included on this site, and we accept no liability.