SW HJOF

Bulkhead fitting socket, angle 90°

Properties

Connection 1	ORFS external threads
Sealing form 1	flat seal with O-ring
Connection 2	ORFS external threads
Sealing form 2	flat seal with O-ring
Design	Bulkhead fitting socket
Construction	Angle 90°
Material	Steel
Surface	electro galvanised



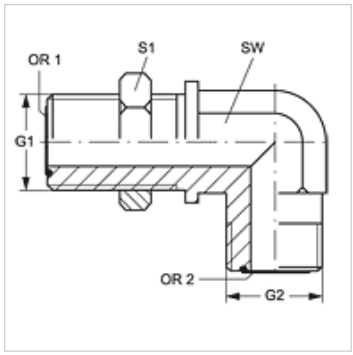

Item

Identification	G1 + G2	AF (mm)	S1	OR1 + OR2
SW HJOF 04	9/16"-18 UNF	14	22	7.66 x 1.78
SW HJOF 06	11/16" -16 UN	19	27	9.25 x 1.78
SW HJOF 08	13/16" -16 UN	19	30	12.42 x 1.78
SW HJOF 10	1" -14 UNS	27	32	15.60 x 1.78
SW HJOF 12	1.3/16" -12 UN	30	38	18.77 x 1.78
SW HJOF 16	1.7/16" -12 UN	37	46	23.52 x 1.78
SW HJOF 20	1.11/16" -12 UN	41	51	29.87 x 1.78
SW HJOF 24	2" -12 UN	60	48	37.82 x 1.78

SW, S1, S2 = With across flats

Despite careful checking, we cannot guarantee the accuracy of all information included on this site, and we accept no liability.