XVR VA
Screw-in fitting

HANSA-FLEX

Properties

Connection 1	BSP external thread, cylindrical
Sealing form 1	Shape B
Connection 2	metric cylindrical outer thread
Sealing form 2	24° inner cone
Design	Screw-in fitting
Construction	straight
Standard	DIN 3901
Scope of supply	Socket (without union nut and cutting ring)
Material	Stainless steel



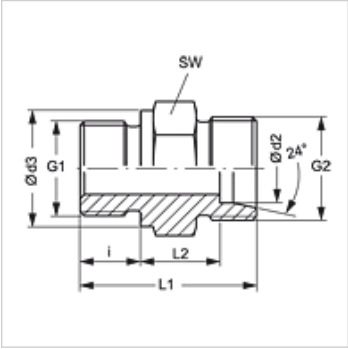

Note

Information about fitting, installation, pressure loads and permissible operating temperatures can be found in the technical information for pipe fittings.

Item

Identification	Series	Operating pressure	Ø d2 (mm)	G1	G2	Ø d3 (mm)	i (mm)	L1 (mm)	L2 (mm)	AF (mm)
XVR NW 04 HL VA	L	PN 315	6	G 1/8" -28	M 12 x 1.5	14	8	23,5	8,5	14
XVR NW 04 HL 1/4 VA	L	PN 315	6	G 1/4" -19	M 12 x 1.5	18	12	29,0	10,0	19
XVR NW 04 HL 3/8 VA	L	PN 315	6	G 3/8" -19	M 12 x 1.5	22	12	30,5	11,5	22
XVR NW 04 HL 1/2 VA	L	PN 315	6	G 1/2" -14	M 12 x 1.5	26	14	32,0	12,0	27
XVR NW 06 HL 1/8 VA	L	PN 315	8	G 1/8" -28	M 14 x 1.5	14	8	24,0	9,0	14
XVR NW 06 HL VA	L	PN 315	8	G 1/4" -19	M 14 x 1.5	18	12	29,0	10,0	19
XVR NW 06 HL 3/8 VA	L	PN 315	8	G 3/8" -19	M 14 x 1.5	22	12	30,5	11,5	22
XVR NW 06 HL 1/2 VA	L	PN 315	8	G 1/2" -14	M 14 x 1.5	26	14	33,0	12,0	27
XVR NW 08 HL 1/8 VA	L	PN 315	10	G 1/8" -28	M 16 x 1.5	14	8	25,5	10,5	17
XVR NW 08 HL VA	L	PN 315	10	G 1/4" -19	M 16 x 1.5	18	12	30,0	11,0	19
XVR NW 08 HL 3/8 VA	L	PN 315	10	G 3/8" -19	M 16 x 1.5	22	12	31,5	12,5	22
XVR NW 08 HL 1/2 VA	L	PN 315	10	G 1/2" -14	M 16 x 1.5	26	14	34,0	13,0	27
XVR NW 08 HL 3/4 VA	L	PN 315	10	G 3/4" -14	M 16 x 1.5	32	16	37,0	14,0	32
XVR NW 10 HL 1/8 VA	L	PN 315	12	G 1/8" -28	M 18 x 1.5	14	8	26,5	11,5	19
XVR NW 10 HL 1/4 VA	L	PN 315	12	G 1/4" -19	M 18 x 1.5	18	12	31,0	12,0	19
XVR NW 10 HL VA	L	PN 315	12	G 3/8" -19	M 18 x 1.5	22	12	31,5	12,5	22
XVR NW 10 HL 1/2 VA	L	PN 315	12	G 1/2" -14	M 18 x 1.5	26	14	34,0	13,0	27
XVR NW 10 HL 3/4 VA	L	PN 315	12	G 3/4" -14	M 18 x 1.5	32	16	37,0	14,0	32
XVR NW 13 HL 1/4 VA	L	PN 315	15	G 1/4" -19	M 22 x 1.5	18	12	32,0	13,0	24
XVR NW 13 HL 3/8 VA	L	PN 250	15	G 3/8" -19	M 22 x 1.5	22	12	33,0	14,0	24
XVR NW 13 HL VA	L	PN 250	15	G 1/2" -14	M 22 x 1.5	26	14	35,0	14,0	27
XVR NW 13 HL 3/4 VA	L	PN 250	15	G 3/4" -14	M 22 x 1.5	32	16	38,0	15,0	32
XVR NW 16 HL 3/8 VA	L	PN 250	18	G 3/8" -19	M 26 x 1.5	22	12	33,5	14,0	27
XVR NW 16 HL VA	L	PN 250	18	G 1/2" -14	M 26 x 1.5	26	14	36,0	14,5	27
XVR NW 16 HL 3/4 VA	L	PN 250	18	G 3/4" -14	M 26 x 1.5	32	16	38,0	14,5	32
XVR NW 16 HL 1 VA	L	PN 250	18	G 1" -11	M 26 x 1.5	39	18	40,5	15,0	41
XVR NW 20 HL 3/8 VA	L	PN 160	22	G 3/8" -19	M 30 x 2	22	12	36,0	16,5	32
XVR NW 20 HL 1/2 VA	L	PN 160	22	G 1/2" -14	M 30 x 2	26	14	38,0	16,5	32
XVR NW 20 HL VA	L	PN 160	22	G 3/4" -14	M 30 x 2	32	16	40,0	16,5	32
XVR NW 20 HL 1 VA	L	PN 160	22	G 1" -11	M 30 x 2	39	18	43,0	17,5	41
XVR NW 20 HL 1 1/4 VA	L	PN 160	22	G 1.1/4" -11	M 30 x 2	49	20	46,0	18,5	50
XVR NW 25 HL 1/2 VA	L	PN 160	28	G 1/2" -14	M 36 x 2	26	14	40,0	18,5	41
XVR NW 25 HL 3/4 VA	L	PN 160	28	G 3/4" -14	M 36 x 2	32	16	41,0	17,5	41
XVR NW 25 HL VA	L	PN 160	28	G 1" -11	M 36 x 2	39	18	43,0	17,5	41
XVR NW 25 HL 11/4 VA	L	PN 160	28	G 1.1/4" -11	M 36 x 2	49	20	46,0	18,5	50
XVR NW 32 HL 1/2 VA	L	PN 160	35	G 1/2" -14	M 45 x 2	26	14	42,0	17,5	46
XVR NW 32 HL 3/4 VA	L	PN 160	35	G 3/4" -14	M 45 x 2	32	16	45,0	18,5	46
XVR NW 32 HL 1 VA	L	PN 160	35	G 1" -11	M 45 x 2	39	18	47,0	18,5	50
XVR NW 32 HL VA	L	PN 160	35	G 1.1/4" -11	M 45 x 2	49	20	48,0	17,5	50
XVR NW 32 HL 11/2 VA	L	PN 160	35	G 1.1/2" -11	M 45 x 2	55	22	51,0	18,5	55
XVR NW 40 HL 1 VA	L	PN 160	42	G 1" -11	M 52 x 2	39	18	48,0	19,0	55
XVR NW 40 HL 11/4 VA	L	PN 160	42	G 1.1/4" -11	M 52 x 2	49	20	50,0	19,0	55
XVR NW 40 HL VA	L	PN 160	42	G 1.1/2" -11	M 52 x 2	55	22	52,0	19,0	55

Despite careful checking, we cannot guarantee the accuracy of all information included on this site, and we accept no liability.

Item

Identification	Series	Operating pressure	Ø d2 (mm)	G1	G2	Ø d3 (mm)	i (mm)	L1 (mm)	L2 (mm)	AF (mm)
XVR NW 03 HS 1/8 VA	S	PN 400	6	G 1/8" -28	M 14 x 1.5	14	8	27,5	12,5	17
XVR NW 03 HS VA	S	PN 400	6	G 1/4" -19	M 14 x 1.5	18	12	32,0	13,0	19
XVR NW 03 HS 3/8 VA	S	PN 400	6	G 3/8" -19	M 14 x 1.5	22	12	32,5	13,5	22
XVR NW 03 HS 1/2 VA	S	PN 400	6	G 1/2" -14	M 14 x 1.5	26	14	35,0	14,0	27
XVR NW 03 HS 3/4 VA	S	PN 400	6	G 3/4" -14	M 14 x 1.5	32	16	38,0	15,0	32
XVR NW 04 HS 1/8 VA	S	PN 400	8	G 1/8" -28	M 16 x 1.5	14	8	27,0	12,0	17
XVR NW 04 HS VA	S	PN 400	8	G 1/4" -19	M 16 x 1.5	18	12	34,0	15,0	19
XVR NW 04 HS 3/8 VA	S	PN 400	8	G 3/8" -19	M 16 x 1.5	22	12	34,5	15,5	22
XVR NW 04 HS 1/2 VA	S	PN 400	8	G 1/2" -14	M 16 x 1.5	26	14	37,0	16,0	27
XVR NW 06 HS 1/8 VA	S	PN 400	10	G 1/8" -28	M 18 x 1.5	14	8	29,5	14,0	19
XVR NW 06 HS 1/4 VA	S	PN 400	10	G 1/4" -19	M 18 x 1.5	18	12	34,0	14,5	22
XVR NW 06 HS VA	S	PN 400	10	G 3/8" -19	M 18 x 1.5	22	12	34,5	15,0	22
XVR NW 06 HS 1/2 VA	S	PN 400	10	G 1/2" -14	M 18 x 1.5	26	14	39,0	17,5	27
XVR NW 06 HS 3/4 VA	S	PN 400	10	G 3/4" -14	M 18 x 1.5	32	16	38,0	14,5	32
XVR NW 08 HS 1/4 VA	S	PN 400	12	G 1/4" -19	M 20 x 1.5	18	12	36,0	16,5	22
XVR NW 08 HS VA	S	PN 400	12	G 3/8" -19	M 20 x 1.5	22	12	36,5	17,5	22
XVR NW 08 HS 1/2 VA	S	PN 400	12	G 1/2" -14	M 20 x 1.5	26	14	39,0	17,5	27
XVR NW 08 HS 3/4 VA	S	PN 400	12	G 3/4" -14	M 20 x 1.5	32	16	41,0	17,5	32
XVR NW 10 HS 1/4 VA	S	PN 400	14	G 1/4" -19	M 22 x 1.5	18	12	38,5	18,5	24
XVR NW 10 HS 3/8 VA	S	PN 400	14	G 3/8" -19	M 22 x 1.5	22	12	38,5	18,5	24
XVR NW 10 HS VA	S	PN 400	14	G 1/2" -14	M 22 x 1.5	26	14	41,0	19,0	27
XVR NW 10 HS 3/4 VA	S	PN 400	14	G 3/4" -14	M 22 x 1.5	32	16	43,0	19,0	32
XVR NW 10 HS 1 VA	S	PN 250	14	G 1" -11	M 22 x 1.5	39	18	48,0	22,0	41
XVR NW 13 HS 1/4 VA	S	PN 400	16	G 1/4" -19	M 24 x 1.5	18	12	38,0	17,5	27
XVR NW 13 HS 3/8 VA	S	PN 400	16	G 3/8" -19	M 24 x 1.5	22	12	39,0	18,5	27
XVR NW 13 HS VA	S	PN 400	16	G 1/2" -14	M 24 x 1.5	26	14	41,0	18,5	27
XVR NW 13 HS 3/4 VA	S	PN 400	16	G 3/4" -14	M 24 x 1.5	32	16	45,0	20,5	32
XVR NW 13 HS 1 VA	S	PN 400	16	G 1" -11	M 24 x 1.5	39	18	43,5	21,5	41
XVR NW 16 HS 3/8 VA	S	PN 400	20	G 3/8" -19	M 30 x 2	22	12	45,0	22,5	32
XVR NW 16 HS 1/2 VA	S	PN 400	20	G 1/2" -14	M 30 x 2	26	14	45,0	20,5	32
XVR NW 16 HS VA	S	PN 400	20	G 3/4" -14	M 30 x 2	32	16	47,0	20,5	32
XVR NW 16 HS 1 VA	S	PN 250	20	G 1" -11	M 30 x 2	39	18	50,0	21,5	41
XVR NW 16 HS 1 1/4 VA	S	PN 400	20	G 1.1/4" -11	M 30 x 2	49	20	53,0	22,5	50
XVR NW 16 HS 1 1/2 VA	S	PN 400	20	G 1.1/2" -11	M 30 x 2	55	22	58,0	25,5	55
XVR NW 20 HS 1/2 VA	S	PN 250	25	G 1/2" -14	M 36 x 2	26	14	49,0	23,0	41
XVR NW 20 HS 3/4 VA	S	PN 250	25	G 3/4" -14	M 36 x 2	32	16	51,0	23,0	41
XVR NW 20 HS VA	S	PN 250	25	G 1" -11	M 36 x 2	39	18	53,0	23,0	41
XVR NW 20 HS 1 1/4 VA	S	PN 160	25	G 1.1/4" -11	M 36 x 2	49	20	56,0	24,0	50
XVR NW 20 HS 1 1/2 VA	S	PN 400	25	G 1.1/2" -11	M 36 x 2	55	22	60,0	26,0	55
XVR NW 25 HS 3/4 VA	S	PN 160	30	G 3/4" -14	M 42 x 2	32	16	53,0	23,5	46
XVR NW 25 HS 1 VA	S	PN 160	30	G 1" -11	M 42 x 2	39	18	55,0	23,5	46
XVR NW 25 HS VA	S	PN 160	30	G 1.1/4" -11	M 42 x 2	49	20	57,0	23,5	50
XVR NW 25 HS 1 1/2 VA	S	PN 160	30	G 1.1/2" -11	M 42 x 2	55	22	62,0	26,5	55
XVR NW 32 HS 1 VA	S	PN 160	38	G 1" -11	M 52 x 2	39	18	60,0	26,0	55
XVR NW 32 HS 1 1/4 VA	S	PN 160	38	G 1.1/4" -11	M 52 x 2	49	20	62,0	26,0	55
XVR NW 32 HS VA	S	PN 160	38	G 1.1/2" -11	M 52 x 2	55	22	64,0	26,0	55

Series: LL = Very light L = Light S = Heavy – PN = Nominal pressure PB = Max. operating pressure – Ø d2 = External pipe diameter

Product versions

XVR	Screw-in fitting, Steel
VR VA	Screw in fitting, Stainless steel

Despite careful checking, we cannot guarantee the accuracy of all information included on this site, and we accept no liability.