XVR ED
Screw-in fitting

HANSA-FLEX

Properties

Connection 1	BSP external thread, cylindrical
Sealing form 1	Shape E
Connection 2	metric cylindrical outer thread
Sealing form 2	24° inner cone
Design	Screw-in fitting
Construction	straight
Standard	DIN 2353 ISO 8434-1
Scope of supply	Socket (without union nut and cutting ring)
Material	Steel
Surface	electro galvanised



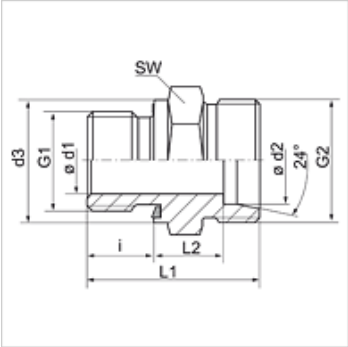

Note

Information about fitting, installation, pressure loads and permissible operating temperatures can be found in the technical information for pipe fittings.

Item

Identification	Series	Operating pressure	Ø d1 (mm)	Ø d2 (mm)	G1	G2	Ø d3 (mm)	i (mm)	L1 (mm)	L2 (mm)	AF (mm)
XVR 04 LL ED	LL	PN 100	-	4	G 1/8" -28	M 8 x 1	14	8	20,0	9,5	14
XVR 06 LL ED	LL	PN 100	-	6	G 1/8" -28	M 10 x 1	14	8	20,0	8,0	14
XVR NW 04 HL ED	L	PN 315	-	6	G 1/8" -28	M 12 x 1.5	14	8	23,5	8,5	14
XVR NW 04 HL 1/4 ED	L	PN 315	-	6	G 1/4" -19	M 12 x 1.5	20	12	29,0	10,0	19
XVR NW 04 HL 1/2 ED	L	PN 315	-	6	G 1/2" -14	M 12 x 1.5	27	14	33,0	12,0	27
XVR NW 04 HL 3/8 ED	L	PN 315	-	6	G 3/8" -19	M 12 x 1.5	22	12	29,5	10,5	22
XVR NW 06 HL 1/8 ED	L	PN 315	-	8	G 1/8" -28	M 14 x 1.5	14	8	24,5	9,5	14
XVR NW 06 HL ED	L	PN 315	-	8	G 1/4" -19	M 14 x 1.5	19	12	29,0	10,0	19
XVR NW 06 HL 3/8 ED	L	PN 315	-	8	G 3/8" -19	M 14 x 1.5	22	12	30,5	11,5	22
XVR NW 06 HL 1/2 ED	L	PN 315	-	8	G 1/2" -14	M 14 x 1.5	27	14	33,0	12,0	27
XVR NW 08 HL 1/8 ED	L	PN 315	-	10	G 1/8" -28	M 16 x 1.5	14	8	25,5	10,5	19
XVR NW 08 HL ED	L	PN 315	-	10	G 1/4" -19	M 16 x 1.5	19	12	30,0	11,0	19
XVR NW 08 HL 3/8 ED	L	PN 315	-	10	G 3/8" -19	M 16 x 1.5	22	12	31,5	12,5	22
XVR NW 08 HL 1/2 ED	L	PN 315	-	10	G 1/2" -14	M 16 x 1.5	27	14	34,0	13,0	27
XVR NW 10 HL 1/4 ED	L	PN 315	-	12	G 1/4" -19	M 18 x 1.5	19	12	31,5	12,5	22
XVR NW 10 HL ED	L	PN 315	-	12	G 3/8" -19	M 18 x 1.5	22	12	31,5	12,5	22
XVR NW 10 HL 1/2 ED	L	PN 315	-	12	G 1/2" -14	M 18 x 1.5	27	14	34,0	13,0	27
XVR NW 10 HL 3/4 ED	L	PN 250	-	12	G 3/4" -14	M 18 x 1.5	32	16	36,0	13,0	32
XVR NW 13 HL 3/8 ED	L	PN 315	-	15	G 3/8" -19	M 22 x 1.5	22	12	33,0	14,0	27
XVR NW 13 HL ED	L	PN 315	-	15	G 1/2" -14	M 22 x 1.5	27	14	35,0	14,0	27
XVR NW 13 HL 3/4 ED	L	PN 250	-	15	G 3/4" -14	M 22 x 1.5	32	16	38,0	15,0	32
XVR NW 16 HL 3/8 ED	L	PN 315	-	18	G 3/8" -19	M 26 x 1.5	22	12	33,5	14,0	27
XVR NW 16 HL ED	L	PN 315	-	18	G 1/2" -14	M 26 x 1.5	27	14	36,0	14,5	27
XVR NW 16 HL 3/4 ED	L	PN 250	-	18	G 3/4" -14	M 26 x 1.5	32	16	38,0	14,5	32
XVR NW 20 HL 1/2 ED	L	PN 160	-	22	G 1/2" -14	M 30 x 2	27	14	38,0	16,5	32
XVR NW 20 HL ED	L	PN 160	-	22	G 3/4" -14	M 30 x 2	32	16	40,0	16,5	32
XVR NW 20 HL 1 ED	L	PN 160	-	22	G 1" -11	M 30 x 2	40	18	42,0	16,5	41
XVR NW 25 HL 3/4 ED	L	PN 160	-	28	G 3/4" -14	M 36 x 2	32	16	41,0	17,5	41
XVR NW 25 HL ED	L	PN 160	-	28	G 1" -11	M 36 x 2	40	18	43,0	17,5	41
XVR NW 25 HL 1 1/4 ED	L	PN 160	-	28	G 1.1/4" -11	M 36 x 2	50	20	46,0	18,5	50
XVR NW 32 HL 1 ED	L	PN 160	-	35	G 1" -11	M 45 x 2	40	18	46,0	17,5	50
XVR NW 32 HL ED	L	PN 160	-	35	G 1.1/4" -11	M 45 x 2	50	20	48,0	17,5	50
XVR NW 32 HL 11/2 ED	L	PN 160	30	35	G 1.1/2"	M 45 x 2	55	22	52,0	19,5	55
XVR NW 40 HL 1 1/4 ED	L	PN 160	-	42	G 1.1/4" -11	M 52 x 2	50	20	50,0	19,0	55
XVR NW 40 HL ED	L	PN 160	-	42	G 1.1/2" -11	M 52 x 2	55	22	52,0	19,0	55
XVR NW 03 HS ED	S	PN 630	-	6	G 1/4" -19	M 14 x 1.5	19	12	32,0	13,0	19
XVR NW 03 HS 1/2 ED	S	PN 630	-	6	G 1/2" -14	M 14 x 1.5	27	14	39,0	18,0	27
XVR NW 04 HS ED	S	PN 630	-	8	G 1/4" -19	M 16 x 1.5	19	12	34,0	15,0	19
XVR NW 04 HS 3/8 ED	S	PN 630	-	8	G 3/8" -19	M 16 x 1.5	22	12	34,5	15,5	22
XVR NW 06 HS 1/4 ED	S	PN 630	-	10	G 1/4" -19	M 18 x 1.5	19	12	34,0	14,5	22

Despite careful checking, we cannot guarantee the accuracy of all information included on this site, and we accept no liability.

XVR ED
Screw-in fitting

HANSA-FLEX

Item

Identification	Series	Operating pressure	Ø d1 (mm)	Ø d2 (mm)	G1	G2	Ø d3 (mm)	i (mm)	L1 (mm)	L2 (mm)	AF (mm)
XVR NW 06 HS ED	S	PN 630	-	10	G 3/8" -19	M 18 x 1.5	22	12	34,5	15,0	22
XVR NW 06 HS 1/2 ED	S	PN 630	-	10	G 1/2" -14	M 18 x 1.5	27	14	39,0	17,5	27
XVR NW 08 HS 1/4 ED	S	PN 630	-	12	G 1/4" -19	M 20 x 1.5	19	12	36,0	16,5	22
XVR NW 08 HS ED	S	PN 630	-	12	G 3/8" -19	M 20 x 1.5	22	12	36,5	17,0	22
XVR NW 08 HS 1/2 ED	S	PN 630	-	12	G 1/2" -14	M 20 x 1.5	27	14	39,0	17,5	27
XVR NW 10 HS 3/8 ED	S	PN 630	-	14	G 3/8" -19	M 22 x 1.5	22	12	38,5	18,5	27
XVR NW 10 HS ED	S	PN 630	-	14	G 1/2" -14	M 22 x 1.5	27	14	41,0	19,0	27
XVR NW 10 HS 3/4 ED	S	PN 630	-	14	G 3/4" -14	M 22 x 1.5	32	16	45,0	21,0	32
XVR NW 13 HS 3/8 ED	S	PN 400	-	16	G 3/8" -19	M 24 x 1.5	22	12	38,5	18,0	27
XVR NW 13 HS ED	S	PN 400	-	16	G 1/2" -14	M 24 x 1.5	27	14	41,0	18,5	27
XVR NW 13 HS 3/4 ED	S	PN 400	-	16	G 3/4" -14	M 24 x 1.5	32	16	45,0	20,5	32
XVR NW 13 HS 1 ED	S	PN 400	-	16	G 1"	M 24 x 1.5	39	18	45,5	18,8	41
XVR NW 16 HS 1/2 ED	S	PN 400	-	20	G 1/2" -14	M 30 x 2	27	14	45,0	20,5	32
XVR NW 16 HS ED	S	PN 400	-	20	G 3/4" -14	M 30 x 2	32	16	47,0	20,5	32
XVR NW 16 HS 1 ED	S	PN 400	-	20	G 1" -11	M 30 x 2	40	18	51,0	22,5	41
XVR NW 20 HS 1/2 ED	S	PN 400	-	25	G 1/2" -14	M 36 x 2	27	14	49,0	23,0	41
XVR NW 20 HS 3/4 ED	S	PN 400	-	25	G 3/4" -14	M 36 x 2	32	16	51,0	23,0	41
XVR NW 20 HS ED	S	PN 400	-	25	G 1" -11	M 36 x 2	40	18	53,0	23,0	41
XVR NW 25 HS 1 ED	S	PN 400	-	30	G 1" -11	M 42 x 2	40	18	55,0	23,5	50
XVR NW 25 HS ED	S	PN 400	-	30	G 1.1/4" -11	M 42 x 2	50	20	57,0	23,5	50
XVR NW 32 HS 1 1/4 ED	S	PN 315	-	38	G 1.1/4" -11	M 52 x 2	50	20	62,0	26,0	55
XVR NW 32 HS ED	S	PN 315	-	38	G 1.1/2" -11	M 52 x 2	55	22	64,0	26,0	55

Series: LL = Very light L = Light S = Heavy – PN = Nominal pressure PB = Max. operating pressure – Ø d2 = External pipe diameter

Product versions

XVR ED VA	Screw-in fitting, Stainless steel
VR ED	Screw-in fitting, Steel

Spare parts

WD	Soft seal for ED fittings

Despite careful checking, we cannot guarantee the accuracy of all information included on this site, and we accept no liability.