VERSCHLUSS AOB
Blanking nut

Properties

Connection 1	BSP nut thread
Sealing form 1	60° outer cone with O-ring
Design	Blanking nut
Construction	straight
Material	Steel
Surface	electro galvanised



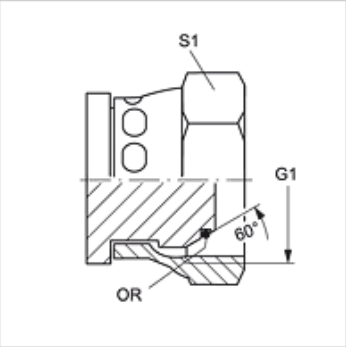

Item

Identification	G1	S1	OR
VERSCHLUSS AOB 02	G 1/8" -28	14	4.5 x 1.5
VERSCHLUSS AOB 04	G 1/4" -19	17	6.5 x 1.0
VERSCHLUSS AOB 06	G 3/8" -19	22	8.1 x 1.6
VERSCHLUSS AOB 08	G 1/2" -14	27	12.1 x 1.6
VERSCHLUSS AOB 10	G 5/8" -14	27	13.1 x 1.6
VERSCHLUSS AOB 12	G 3/4" -14	32	17.1 x 1.6
VERSCHLUSS AOB 16	G 1" -11	41	22.1 x 1.6

SW, S1, S2 = With across flats

Despite careful checking, we cannot guarantee the accuracy of all information included on this site, and we accept no liability.