# VERSCHLUSS HJ VA
Blanking socket

## Properties

| | |
|---|---|
| **Connection 1** | UN/UNF external threads |
| **Sealing form 1** | 74° outer cone |
| **Design** | Blanking socket |
| **Material** | Stainless steel |



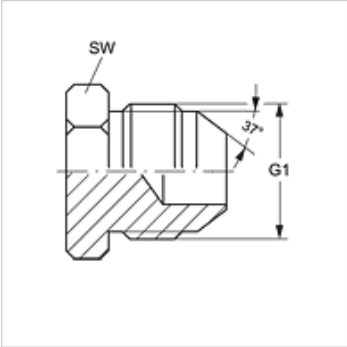


## Item

| Identification | G1 | AF (mm) |
|---|---|---|
| **VERSCHLUSS HJ 04 VA** | 7/16"-20 UNF | 13 |
| **VERSCHLUSS HJ 05 VA** | 1/2"-20 UNF | 14 |
| **VERSCHLUSS HJ 06 VA** | 9/16"-18 UNF | 17 |
| **VERSCHLUSS HJ 08 VA** | 3/4"-16 UNF | 19 |
| **VERSCHLUSS HJ 10 VA** | 7/8" -14 UNF | 24 |
| **VERSCHLUSS HJ 12 VA** | 1.1/16" -12 UN | 27 |
| **VERSCHLUSS HJ 16 VA** | 1.5/16" -12 UN | 36 |
| **VERSCHLUSS HJ 20 VA** | 1.5/8" -12 UN | 46 |
| **VERSCHLUSS HJ 24 VA** | 1.7/8" -12 UN | 51 |

SW, S1, S2 = With across flats

## Product versions

| | |
|---|---|
| **VERSCHLUSS HJ** | Blanking socket, Steel |

*Despite careful checking, we cannot guarantee the accuracy of all information included on this site, and we accept no liability.*