VERSCHLUSS HJL
Blanking socket

Properties

Connection 1	metric cylindrical outer thread
Sealing form 1	60° outer cone
Design	Blanking socket
Construction	straight
Material	Steel
Surface	electro galvanised



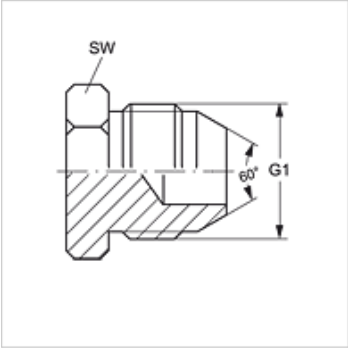

Item

Identification	G1	AF (mm)
VERSCHLUSS HJL 14	M 14 x 1.5	14
VERSCHLUSS HJL 16	M 16 x 1.5	17
VERSCHLUSS HJL 18	M 18 x 1.5	19
VERSCHLUSS HJL 22	M 22 x 1.5	22
VERSCHLUSS HJL 24	M 24 x 1.5	24
VERSCHLUSS HJL 30	M 30 x 1.5	30
VERSCHLUSS HJL 33	M 33 x 1.5	36

SW, S1, S2 = With across flats

Despite careful checking, we cannot guarantee the accuracy of all information included on this site, and we accept no liability.