VERSCHLUSS HJOF
Blanking socket

HANSA-FLEX

Properties

Connection 1	ORFS external threads
Sealing form 1	flat seal with O-ring
Design	Blanking socket
Material	Steel
Surface	electro galvanised

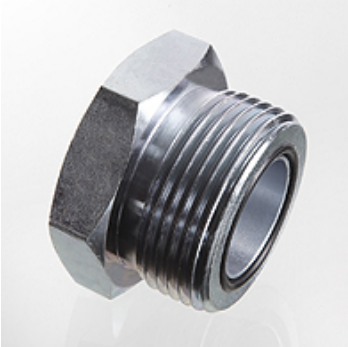

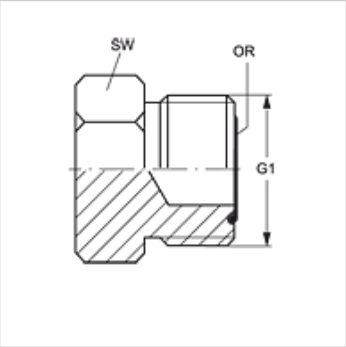

Item

Identification	G1	i (mm)	L1 (mm)	AF (mm)	OR
VERSCHLUSS HJOF 04	9/16"-18 UNF	10,0	16,5	17	7.65 x 1.78
VERSCHLUSS HJOF 06	11/16" -16 UN	11,0	19,0	19	9.25 x 1.78
VERSCHLUSS HJOF 08	13/16" -16 UN	13,0	22,0	22	12.42 x 1.78
VERSCHLUSS HJOF 10	1" -14 UNS	15,5	26,0	27	15.60 x 1.78
VERSCHLUSS HJOF 12	1.3/16" -12 UN	17,0	27,5	32	18.77 x 1.78
VERSCHLUSS HJOF 16	1.7/16" -12 UN	17,5	28,0	41	23.52 x 1.78
VERSCHLUSS HJOF 20	1.11/16" -12 UN	17,5	28,0	46	29.87 x 1.78
VERSCHLUSS HJOF 24	2" -12 UN	17,5	28,0	55	37.82 x 1.78

SW, S1, S2 = With across flats

Despite careful checking, we cannot guarantee the accuracy of all information included on this site, and we accept no liability.