XVU VA
Screw-in fitting

HANSA-FLEX

Properties

Connection 1	UN/UNF external threads
Sealing form 1	Shape F
Connection 2	metric cylindrical outer thread
Sealing form 2	24° inner cone
Design	Screw-in fitting
Construction	straight
Standard	DIN 2353 ISO 8434-1
Scope of supply	Socket (without union nut and cutting ring)
Material	Stainless steel



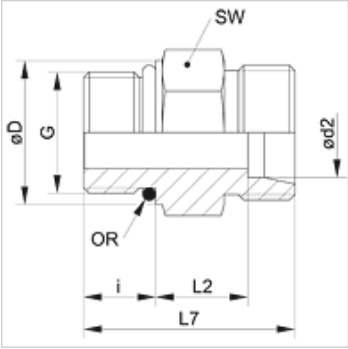

Note

Information about fitting, installation, pressure loads and permissible operating temperatures can be found in the technical information for pipe fittings.

Item

Identification	Series	Operating pressure	Ø d2 (mm)	G	Ø D (mm)	i (mm)	L2 (mm)	L7 (mm)	AF (mm)	OR
XVU NW 04 HL 9/16 VA	L	PN 315	6	9/16"-18 UNF	17,6	10,0	11,0	28,0	19	11.89 x 1.98
XVU NW 04 HL 7/16 VA	L	PN 315	6	7/16"-20 UNF	14,4	9,1	9,9	26,0	17	9.17 x 1.83
XVU NW 04 HL 1/2 VA	L	PN 315	6	1/2"-20 UNF	16,8	9,1	9,9	26,0	17	10.52 x 1.83
XVU NW 06 HL 7/16 VA	L	PN 315	8	7/16"-20 UNF	14,4	9,1	12,9	29,0	17	9.17 x 1.83
XVU NW 06 HL 1/2 VA	L	PN 315	8	1/2"-20 UNF	16,8	9,1	12,9	29,0	17	10.52 x 1.83
XVU NW 06 HL 9/16 VA	L	PN 315	8	9/16"-18 UNF	17,6	10,0	13,0	30,0	19	11.89 x 1.98
XVU NW 08 HL 7/16 VA	L	PN 315	10	7/16"-20 UNF	14,4	9,1	13,9	30,0	17	9.17 x 1.83
XVU NW 08 HL 1/2 VA	L	PN 315	10	1/2"-20 UNF	17,0	9,2	11,0	26,0	17	10.52 x 1.83
XVU NW 08 HL 9/16 VA	L	PN 315	10	9/16"-18 UNF	17,6	10,0	14,0	31,0	19	11.89 x 1.98
XVU NW 08 HL 3/4 VA	L	PN 315	10	3/4"-16 UNF	22,3	11,1	14,9	33,0	24	16.36 x 2.20
XVU NW 10 HL 9/16 VA	L	PN 315	12	9/16"-18 UNF	17,6	10,0	12,0	29,0	19	11.89 x 1.98
XVU NW 10 HL 3/4 VA	L	PN 315	12	3/4"-16 UNF	22,3	11,1	12,9	31,0	24	16.36 x 2.20
XVU NW 10 HL 7/8 VA	L	PN 315	12	7/8"-14 UNF	25,5	12,7	14,3	34,0	27	19.18 x 2.46
XVU NW 13 HL 9/16 VA	L	PN 315	15	9/16"-18 UNF	17,6	10,0	14,0	31,0	24	11.89 x 1.98
XVU NW 13 HL 3/4 VA	L	PN 315	15	3/4"-16 UNF	22,3	11,1	13,9	32,0	24	16.36 x 2.20
XVU NW 13 HL 7/8 VA	L	PN 315	15	7/8"-14 UNF	25,5	12,7	15,8	35,5	27	19.18 x 2.46
XVU NW 16 HL 3/4 VA	L	PN 315	18	3/4"-16 UNF	22,3	11,1	14,4	33,0	27	16.36 x 2.20
XVU NW 16 HL 7/8 VA	L	PN 315	18	7/8"-14 UNF	25,5	12,7	14,5	34,7	27	19.18 x 2.46
XVU NW 16 HL 1 1/16 VA	L	PN 315	18	1.1/16" -12 UN	31,9	15,1	14,4	37,0	32	23.47 x 2.95
XVU NW 20 HL 7/8 VA	L	PN 160	22	7/8"-14 UNF	25,5	12,7	16,8	37,0	32	19.18 x 2.46
XVU NW 20 HL 1 1/16 VA	L	PN 160	22	1.1/16" -12 UN	31,9	15,1	16,4	39,0	32	23.47 x 2.95
XVU NW 20 HL 1 5/16 VA	L	PN 160	22	1.5/16" -12 UN	38,2	15,1	17,4	40,0	41	29.74 x 2.95
XVU NW 25 HL 1 1/16 VA	L	PN 160	28	1.1/16" -12 UN	31,9	15,1	17,4	40,0	41	23.47 x 2.95
XVU NW 25 HL 1 5/16 VA	L	PN 160	28	1.5/16" -12 UN	38,2	15,1	17,4	40,0	41	29.74 x 2.95
XVU NW 32 HL 1 5/8 VA	L	PN 160	35	1.5/8" -12 UN	47,7	15,1	17,4	43,0	50	37.47 x 3.00
XVU NW 03 HS 7/16 VA	S	PN 630	6	7/16"-20 UNF	14,4	9,1	14,9	31,0	17	9.17 x 1.83
XVU NW 04 HS 7/16 VA	S	PN 630	8	7/16"-20 UNF	14,4	9,1	14,9	31,0	17	9.17 x 1.83
XVU NW 04 HS 1/2 VA	S	PN 630	8	1/2"-20 UNF	16,8	9,1	14,9	31,0	19	10.52 x 1.83
XVU NW 04 HS 9/16 VA	S	PN 630	8	9/16"-18 UNF	17,6	10,0	15,0	32,0	19	11.89 x 1.98
XVU NW 06 HS 9/16 VA	S	PN 630	10	9/16"-18 UNF	17,6	10,0	14,5	32,0	19	10.89 x 1.98
XVU NW 06 HS 3/4 VA	S	PN 630	10	3/4"-16 UNF	22,3	11,1	14,4	33,0	24	16.36 x 2.20
XVU NW 08 HS 9/16 VA	S	PN 630	12	9/16"-18 UNF	17,6	10,0	14,5	32,0	22	11.89 x 1.98
XVU NW 08 HS 3/4 VA	S	PN 630	12	3/4"-16 UNF	22,3	11,1	17,4	36,0	24	16.36 x 2.20
XVU NW 08 HS 7/8 VA	S	PN 630	12	7/8"-14 UNF	25,5	12,7	17,8	38,0	27	19.18 x 2.46
XVU NW 13 HS 3/4 VA	S	PN 400	16	3/4"-16 UNF	22,3	11,1	15,4	35,0	24	16.36 x 2.20
XVU NW 13 HS 7/8 VA	S	PN 400	16	7/8"-14 UNF	25,5	12,7	18,8	40,0	27	19.18 x 2.46
XVU NW 16 HS 3/4 VA	S	PN 400	20	3/4"-16 UNF	22,3	11,1	20,4	42,0	32	16.36 x 2.20
XVU NW 16 HS 7/8 VA	S	PN 400	20	7/8"-14 UNF	25,5	12,7	20,8	44,0	32	19.18 x 2.46
XVU NW 16 HS 1 1/16 VA	S	PN 400	20	1.1/16" -12 UN	31,9	15,1	20,4	46,0	32	23.47 x 2.95
XVU NW 20 HS 1 1/16 VA	S	PN 400	25	1.1/16" -12 UN	31,9	15,1	22,9	50,0	41	23.47 x 2.95
XVU NW 20 HS 1 5/16 VA	S	PN 400	25	1.5/16" -12 UN	38,2	15,1	22,9	50,0	41	29.74 x 2.95
XVU NW 25 HS 1 5/16 VA	S	PN 400	30	1.5/16" -12 UN	38,2	15,1	23,4	52,0	46	29.74 x 2.95
XVU NW 25 HS 1 5/8 VA	S	PN 400	30	1.5/8" -12 UN	47,7	15,1	23,4	52,0	50	37.47 x 3.00

Despite careful checking, we cannot guarantee the accuracy of all information included on this site, and we accept no liability.

Item

Identification	Series	Operating pressure	Ø d2 (mm)	G	Ø D (mm)	i (mm)	L2 (mm)	L7 (mm)	AF (mm)	OR
XVU NW 32 HS 1 5/8 VA	S	PN 315	38	1.5/8" -12 UN	47,7	15,1	25,9	57,0	55	37.47 x 3.00
XVU NW 32 HS 17/8 VA	S	PN 315	38	1.7/8" -12 UN	53,8	15,1	25,9	57,0	60	43.69 x 3.00

Series: LL = Very light L = Light S = Heavy – PN = Nominal pressure PB = Max. operating pressure – Ø d2 = External pipe diameter

Product versions

XVU	Screw-in fitting, Steel
VU VA	Screw in fitting, Stainless steel

Despite careful checking, we cannot guarantee the accuracy of all information included on this site, and we accept no liability.