VERSCHLUSS IJ
Blanking nut

HANSA-FLEX

Properties

Connection 1	UN/UNF inner thread
Sealing form 1	74° inner cone
Design	Blanking nut
Construction	straight
Material	Steel
Surface	electro galvanised

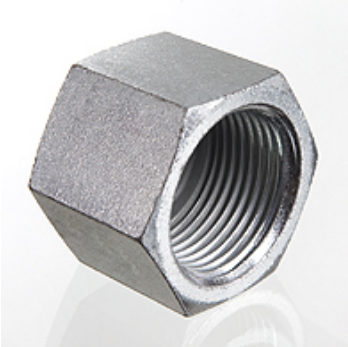

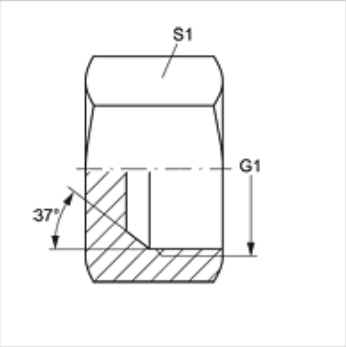

Item

Identification	G1	S1
VERSCHLUSS IJ 04	7/16"-20 UNF	14
VERSCHLUSS IJ 05	1/2"-20 UNF	17
VERSCHLUSS IJ 06	9/16"-18 UNF	19
VERSCHLUSS IJ 08	3/4"-16 UNF	22
VERSCHLUSS IJ 10	7/8" -14 UNF	27
VERSCHLUSS IJ 12	1.1/16" -12 UN	32
VERSCHLUSS IJ 16	1.5/16" -12 UN	41
VERSCHLUSS IJ 20	1.5/8" -12 UN	50
VERSCHLUSS IJ 24	1.7/8" -12 UN	60
VERSCHLUSS IJ 32	2.1/2" -12 UN	73

SW, S1, S2 = With across flats

Despite careful checking, we cannot guarantee the accuracy of all information included on this site, and we accept no liability.