VERSCHLUSS IR
Blanking nut

Properties

Connection 1	BSP cylindrical internal threads
Sealing form 1	flat sealing
Design	Blanking nut
Construction	straight
Material	Steel
Surface	electro galvanised

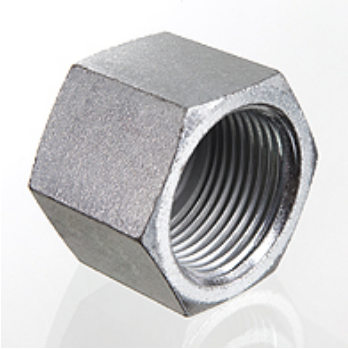

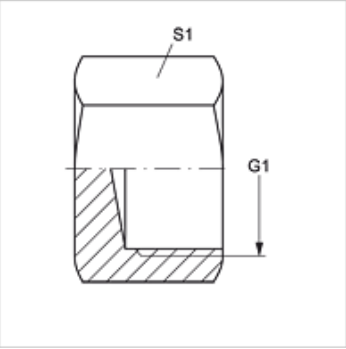

Item

Identification	G1	S1
VERSCHLUSS IR 02	G 1/8" -28	14
VERSCHLUSS IR 04	G 1/4" -19	19
VERSCHLUSS IR 06	G 3/8" -19	22
VERSCHLUSS IR 08	G 1/2" -14	27
VERSCHLUSS IR 12	G 3/4" -14	32
VERSCHLUSS IR 16	G 1" -11	41
VERSCHLUSS IR 20	G 1.1/4" -11	50
VERSCHLUSS IR 24	G 1.1/2" -11	55
VERSCHLUSS IR 32	G 2" -11	70

SW, S1, S2 = With across flats

Despite careful checking, we cannot guarantee the accuracy of all information included on this site, and we accept no liability.