VERSCHLUSS O
Blanking socket

HANSA-FLEX

Properties

Connection 1	UN/UNF external threads
Sealing form 1	O-ring seal
Design	Blanking socket
Construction	straight
Material	Steel
Surface	electro galvanised



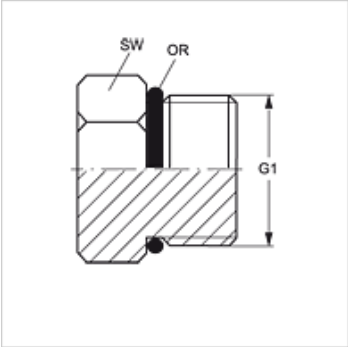

Item

Identification	G1	AF (mm)	OR
VERSCHLUSS O 02	5/16"-24 UNF	11	6.07 x 1.63
VERSCHLUSS O 03	3/8"-24 UNF	13	7.65 x 1.78
VERSCHLUSS O 04	7/16"-20 UNF	14	8.92 x 1.83
VERSCHLUSS O 05	1/2"-20 UNF	16	10.52 x 1.83
VERSCHLUSS O 06	9/16"-18 UNF	18	11.90 x 1.98
VERSCHLUSS O 08	3/4"-16 UNF	22	16.36 x 2.20
VERSCHLUSS O 10	7/8" -14 UNF	25	19.18 x 2.46
VERSCHLUSS O 12	1.1/16" -12 UN	32	23.47 x 2.95
VERSCHLUSS O 14	1.3/16" -12 UN	35	26.59 x 2.95
VERSCHLUSS O 16	1.5/16" -12 UN	38	29.74 x 2.95
VERSCHLUSS O 20	1.5/8" -12 UN	48	37.47 x 3.00
VERSCHLUSS O 24	1.7/8" -12 UN	54	43.69 x 3.00
VERSCHLUSS O 32	2.1/2" -12 UN	70	59.36 x 3.00

SW, S1, S2 = With across flats

Accessory for following products

HK GEH ZP NG	Steel housing sandwich plate NG6/10 for SAE 2-way cartridge valve

Despite careful checking, we cannot guarantee the accuracy of all information included on this site, and we accept no liability.