W45 AJ

Connection socket, angle 45°

Properties

Connection 1	UN/UNF nut threads
Sealing form 1	74° inner cone
Connection 2	UN/UNF nut threads
Sealing form 2	74° inner cone
Design	Connection sockets
Construction	Angle 45°
Material	Steel
Surface	electro galvanised



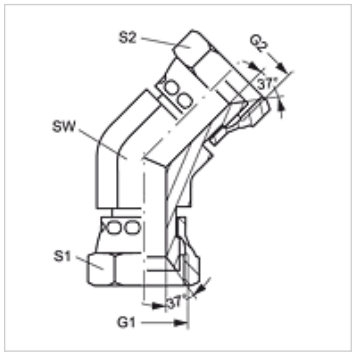

Item

Identification	G1 + G2	S2	S1
W45 AJ 04	7/16"-20 UNF	17	17
W45 AJ 05	1/2"-20 UNF	17	17
W45 AJ 06	9/16"-18 UNF	19	19
W45 AJ 08	3/4"-16 UNF	24	24
W45 AJ 10	7/8"-14 UNF	27	27
W45 AJ 12	1.1/16" -12 UN	32	32
W45 AJ 16	1.5/16" -12 UN	41	41

SW, S1, S2 = With across flats

Despite careful checking, we cannot guarantee the accuracy of all information included on this site, and we accept no liability.