W45 AJ HJ

Screw-on socket, angle 45°

Properties

Connection 1	UN/UNF nut threads
Sealing form 1	74° inner cone
Connection 2	UN/UNF external threads
Sealing form 2	74° outer cone
Design	Screw-on socket
Construction	Angle 45°
Material	Steel
Surface	electro galvanised



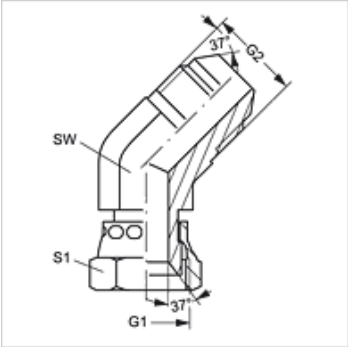

Item

Identification	Operating pressure	G1	G2	AF (mm)	S1
W45 AJ 04 HJ	PN 350	7/16"-20 UNF	7/16"-20 UNF	12	14
W45 AJ 05 HJ	PN 350	1/2"-20 UNF	1/2"-20 UNF	14	16
W45 AJ 06 HJ	PN 250	9/16"-18 UNF	9/16"-18 UNF	14	19
W45 AJ 08 HJ	PN 250	3/4"-16 UNF	3/4"-16 UNF	19	22
W45 AJ 10 HJ	PN 200	7/8" -14 UNF	7/8"-14 UNF	22	27
W45 AJ 12 HJ	PN 200	1.1/16" -12 UN	1.1/16" -12 UN	27	32
W45 AJ 14 HJ	PN 160	1.3/16" -12 UN	1.3/16" -12 UN	32	36
W45 AJ 16 HJ	PN 160	1.5/16" -12 UN	1.5/16" -12 UN	33	41
W45 AJ 20 HJ	PN 125	1.5/8" -12 UN	1.5/8" -12 UN	41	50
W45 AJ 24 HJ	PN 100	1.7/8" -12 UN	1.7/8" -12 UN	48	60
W45 AJ 32 HJ	PN 80	2.1/2" -12 UN	2.1/2" -12 UN	65	75

SW, S1, S2 = With across flats

Product versions

W45 AJ HJ VA	Screw-on socket, angle 45°, Stainless steel

Despite careful checking, we cannot guarantee the accuracy of all information included on this site, and we accept no liability.