W45 HMOK HB

Screw-in socket, angle 45°

Properties

Connection 1	metric cylindrical outer thread
Sealing form 1	Thread socket with O-ring + spacer diaphragm ring
Connection 2	BSP cylindrical external threads
Sealing form 2	60° inner cone
Design	Adjustable direction screw-in socket
Construction	Angle 45°
Material	Steel
Surface	electro galvanised



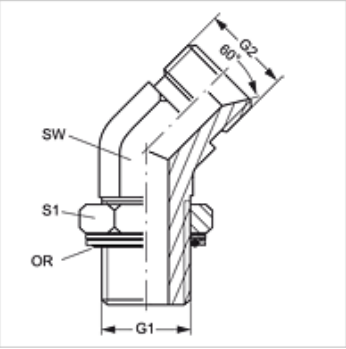

Item

Identification	G1	G2	AF (mm)	S1	OR
W45 HMOK 48 HB 24	M 48 x 2	G 1.1/2" -11	50	55	44.0 x 3.0

SW, S1, S2 = With across flats

Spare parts

KAMMRING M	Diaphragm ring, metric

Despite careful checking, we cannot guarantee the accuracy of all information included on this site, and we accept no liability.