W45 HN HJ

Screw-in socket, angle 45°

Properties

Connection 1	NPT external threads
Sealing form 1	thread seal
Connection 2	UN/UNF external threads
Sealing form 2	74° outer cone
Design	Screw-in sockets
Construction	Angle 45°
Material	Steel
Surface	electro galvanised



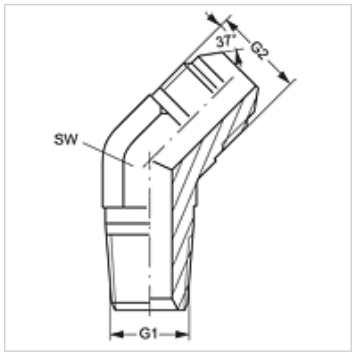

Item

Identification	G1	G2	AF (mm)
W45 HN 02 HJ 04	1/8" -27 NPT	7/16"-20 UNF	11
W45 HN 02 HJ 05	1/8" -27 NPT	1/2"-20 UNF	13
W45 HN 02 HJ 06	1/8" -27 NPT	9/16"-18 UNF	14
W45 HN 04 HJ	1/4" -18 NPT	7/16"-20 UNF	14
W45 HN 04 HJ 05	1/4" -18 NPT	1/2"-20 UNF	14
W45 HN 04 HJ 06	1/4" -18 NPT	9/16"-18 UNF	14
W45 HN 04 HJ 08	1/4" -18 NPT	3/4"-16 UNF	19
W45 HN 06 HJ	3/8" -18 NPT	9/16"-18 UNF	19
W45 HN 06 HJ 08	3/8" -18 NPT	3/4"-16 UNF	19
W45 HN 06 HJ 10	3/8" -18 NPT	7/8"-14 UNF	22
W45 HN 08 HJ	1/2" -14 NPT	3/4"-16 UNF	22
W45 HN 08 HJ 06	1/2" -14 NPT	9/16"-18 UNF	22
W45 HN 08 HJ 10	1/2" -14 NPT	7/8"-14 UNF	22
W45 HN 08 HJ 12	1/2" -14 NPT	1.1/16" -12 UN	27
W45 HN 12 HJ	3/4" -14 NPT	1.1/16" -12 UN	27
W45 HN 12 HJ 08	3/4" -14 NPT	3/4"-16 UNF	27
W45 HN 12 HJ 10	3/4" -14 NPT	7/8"-14 UNF	27
W45 HN 12 HJ 14	3/4" -14 NPT	1.3/16" -12 UN	33
W45 HN 12 HJ 16	3/4" -14 NPT	1.5/16" -12 UN	33
W45 HN 16 HJ	1" -11.5 NPT	1.5/16" -12 UN	33
W45 HN 16 HJ 12	1" -11.5 NPT	1.1/16" -12 UN	33
W45 HN 16 HJ 20	1" -11.5 NPT	1.5/8" -12 UN	41
W45 HN 20 HJ	1.1/4" -11.5 NPT	1.5/8" -12 UN	41
W45 HN 24 HJ	1.1/2" -11.5 NPT	1.7/8" -12 UN	48
W45 HN 32 HJ	2" -11.5 NPT	2.1/2" -12 UN	55

AF = Width across flats

Product versions

W45 HN HJ VA	Screw-in socket, angle 45°, Stainless steel

Despite careful checking, we cannot guarantee the accuracy of all information included on this site, and we accept no liability.