W45 HRK HB

Screw-in socket, angle 45°

Properties

Connection 1	BSPT conical external threads
Sealing form 1	thread seal
Connection 2	BSP cylindrical external threads
Sealing form 2	60° inner cone
Design	Screw-in sockets
Construction	Angle 45°
Material	Steel
Surface	electro galvanised



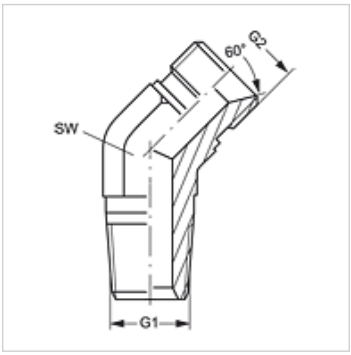

Item

Identification	G1	G2	AF (mm)
W45 HRK 04 HB	R 1/4" K	G 1/4" -19	14
W45 HRK 04 HB 06	R 1/4" K	G 3/8" -19	19
W45 HRK 06 HB 04	R 3/8" K	G 1/4" -19	19
W45 HRK 06 HB	R 3/8" K	G 3/8" -19	19
W45 HRK 06 HB 08	R 3/8" K	G 1/2" -14	22
W45 HRK 08 HB 06	R 1/2" K	G 3/8" -19	22
W45 HRK 08 HB	R 1/2" K	G 1/2" -14	22
W45 HRK 08 HB 12	R 1/2" K	G 3/4" -14	27
W45 HRK 12 HB 08	R 3/4" K	G 1/2" -14	27
W45 HRK 12 HB	R 3/4" K	G 3/4" -14	27
W45 HRK 12 HB 16	R 3/4" K	G 1" -11	33
W45 HRK 16 HB 12	R 1" K	G 3/4" -14	33
W45 HRK 16 HB	R 1" K	G 1" -11	33
W45 HRK 16 HB 20	R 1" K	G 1.1/4" -11	41
W45 HRK 20 HB 16	R 1.1/4" K	G 1" -11	41
W45 HRK 20 HB	R 1.1/4" K	G 1.1/4" -11	41
W45 HRK 20 HB 24	R 1.1/4" K	G 1.1/2" -11	48
W45 HRK 24 HB 20	R 1.1/2" K	G 1.1/4" -11	48
W45 HRK 24 HB	R 1.1/2" K	G 1.1/2" -11	48
W45 HRK 32 HB 24	R 2" K	G 1.1/2" -11	64
W45 HRK 32 HB	R 2" K	G 2" -11	64

AF = Width across flats

Despite careful checking, we cannot guarantee the accuracy of all information included on this site, and we accept no liability.