W45 HRO HJOF

Screw-in socket, angle 45°

Properties

Connection 1	BSP external thread, cylindrical
Sealing form 1	form G
Connection 2	ORFS external threads
Sealing form 2	flat seal with O-ring
Design	Screw-in sockets
Construction	Angle 45°
Material	Steel
Surface	electro galvanised



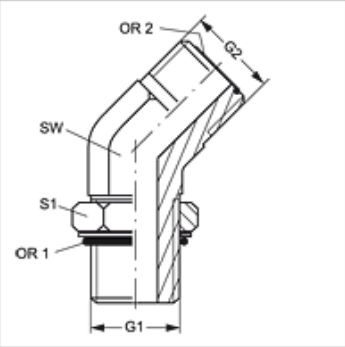

Item

Identification	G1	G2	AF (mm)	S1	OR1	OR2
W45 HRO 20 HJOF	G 1.1/4" -11	1.11/16" -12 UN	41	50	37.69 x 3.53	29.87 x 1.78
W45 HRO 24 HJOF	G 1.1/2" -11	2" -12 UN	50	55	44.04 x 3.53	37.82 x 1.78

SW, S1, S2 = With across flats

Despite careful checking, we cannot guarantee the accuracy of all information included on this site, and we accept no liability.