W45 IR

Connection socket, angle 45°

Properties

Connection 1	BSP cylindrical internal threads
Sealing form 1	flat sealing
Connection 2	BSP cylindrical internal threads
Sealing form 2	Flat seal
Design	Connection sockets
Construction	Angle 45°
Material	Steel
Surface	electro galvanised



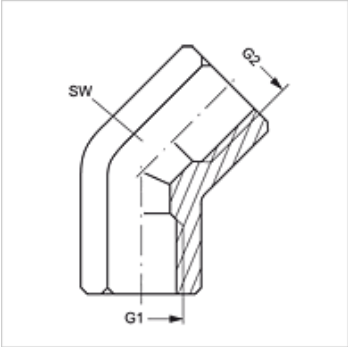

Item

Identification	G1 + G2	AF (mm)
W45 IR 02	G 1/8" -28	17
W45 IR 04	G 1/4" -19	19
W45 IR 06	G 3/8" -19	22
W45 IR 08	G 1/2" -14	27
W45 IR 12	G 3/4" -14	33
W45 IR 16	G 1" -11	41

AF = Width across flats

Despite careful checking, we cannot guarantee the accuracy of all information included on this site, and we accept no liability.