W45 O HJ

Screw-in socket, angle 45°

Properties

Connection 1	UN/UNF external threads
Sealing form 1	O-ring seal on screw-in socket
Connection 2	UN/UNF external threads
Sealing form 2	74° outer cone
Design	Adjustable direction screw-in socket
Construction	Angle 45°
Material	Steel
Surface	electro galvanised



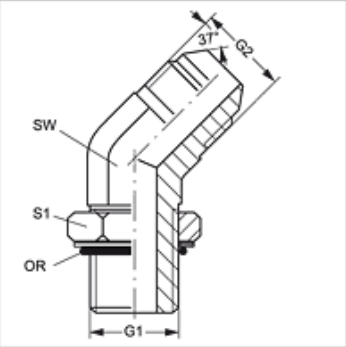

Item

Identification	G1	G2	AF (mm)	S1	OR
W45 O 04 HJ	7/16"-20 UNF	7/16"-20 UNF	11	14	8.92 x 1.83
W45 O 05 HJ 04	1/2"-20 UNF	7/16"-20 UNF	13	16	10.52 x 1.83
W45 O 05 HJ	1/2"-20 UNF	1/2"-20 UNF	13	16	10.52 x 1.83
W45 O 06 HJ	9/16"-18 UNF	9/16"-18 UNF	14	17	11.90 x 1.98
W45 O 06 HJ 08	9/16"-18 UNF	3/4"-16 UNF	19	17	11.90 x 1.98
W45 O 08 HJ 06	3/4"-16 UNF	9/16"-18 UNF	19	22	16.36 x 2.20
W45 O 08 HJ	3/4"-16 UNF	3/4"-16 UNF	19	22	16.36 x 2.20
W45 O 08 HJ 10	3/4"-16 UNF	7/8"-14 UNF	22	22	16.36 x 2.20
W45 O 08 HJ 12	3/4"-16 UNF	1.1/16" -12 UN	22	27	16.36 x 2.20
W45 O 10 HJ 08	7/8" -14 UNF	3/4"-16 UNF	22	25	19.18 x 2.46
W45 O 10 HJ	7/8" -14 UNF	7/8"-14 UNF	22	27	19.18 x 2.46
W45 O 10 HJ 12	7/8" -14 UNF	1.1/16" -12 UN	27	25	19.18 x 2.46
W45 O 12 HJ 08	1.1/16" -12 UN	3/4"-16 UNF	22	32	23.47 x 2.95
W45 O 12 HJ 10	1.1/16" -12 UN	7/8"-14 UNF	32	22	23.47 x 2.95
W45 O 12 HJ	1.1/16" -12 UN	1.1/16" -12 UN	27	32	23.47 x 2.95
W45 O 12 HJ 16	1.1/16" -12 UN	1.5/16" -12 UN	33	32	23.47 x 2.95
W45 O 16 HJ 12	1.5/16" -12 UN	1.1/16" -12 UN	38	27	29.74 x 2.95
W45 O 16 HJ	1.5/16" -12 UN	1.5/16" -12 UN	33	38	29.74 x 2.95
W45 O 16 HJ 20	1.5/16" -12 UN	1.5/8" -12 UN	41	38	29.74 x 2.95
W45 O 20 HJ 16	1.5/8" -12 UN	1.5/16" -12 UN	33	48	37.47 x 3.00
W45 O 20 HJ	1.5/8" -12 UN	1.5/8" -12 UN	41	48	37.47 x 3.00
W45 O 24 HJ	1.7/8" -12 UN	1.7/8" -12 UN	48	54	43.69 x 3.00
W45 O 32 HJ	2.1/2" -12 UN	2.1/2" -12 UN	66	70	59.36 x 3.00

SW, S1, S2 = With across flats

Product versions

W45 O HJ VA	Screw-in socket, angle 45°, Stainless steel

Despite careful checking, we cannot guarantee the accuracy of all information included on this site, and we accept no liability.