W90 A H

Connection socket, angle 90°

Properties

Connection 1	metric nut thread
Sealing form 1	60° sealing head
Connection 2	metric cylindrical outer thread
Sealing form 2	60° inner cone
Design	Connecting socket (short pipe bend)
Construction	Angle 90°
Material	Steel
Surface	electro galvanised



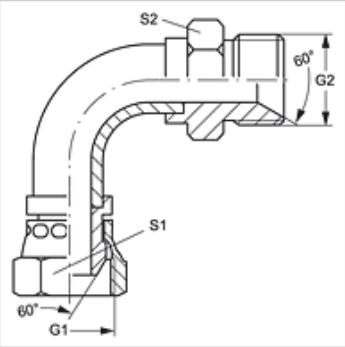

Item

Identification	G1	G2	S1	S2
W90 A 06 H	M 14 x 1.5	M 14 x 1.5	14	19
W90 A 08 H	M 16 x 1.5	M 16 x 1.5	17	22
W90 A 10 H	M 18 x 1.5	M 18 x 1.5	19	24
W90 A 13 H	M 22 x 1.5	M 22 x 1.5	22	27
W90 A 16 H	M 26 x 1.5	M 26 x 1.5	27	32
W90 A 20 H	M 30 x 1.5	M 30 x 1.5	30	36
W90 A 25 H	M 38 x 1.5	M 38 x 1.5	41	46

SW, S1, S2 = With across flats

Despite careful checking, we cannot guarantee the accuracy of all information included on this site, and we accept no liability.