W90 AB HB
Connector, angle 90°

Properties

Connection 1	BSP nut thread
Sealing form 1	60° outer cone
Connection 2	BSP cylindrical external threads
Sealing form 2	60° inner cone
Design	Connectors
Construction	Angle 90°
Material	Steel
Surface	electro galvanised



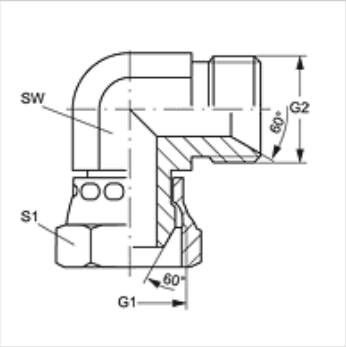

Item

Identification	G1 + G2	AF (mm)	S1
W90 AB 02 HB	G 1/8" -28	10	14
W90 AB 04 HB	G 1/4" -19	14	19
W90 AB 06 HB	G 3/8" -19	17	22
W90 AB 08 HB	G 1/2" -14	22	27
W90 AB 10 HB	G 5/8" -14	24	30
W90 AB 12 HB	G 3/4" -14	27	32
W90 AB 16 HB	G 1" -11	36	41
W90 AB 20 HB	G 1.1/4" -11	46	50
W90 AB 24 HB	G 1.1/2" -11	50	55
W90 AB 32 HB	G 2" -11	60	70

SW, S1, S2 = With across flats

Product versions

W90 AB HB VA	Screw-on socket, angle 90°, Stainless steel

Despite careful checking, we cannot guarantee the accuracy of all information included on this site, and we accept no liability.