W90 AB HB VA

Screw-on socket, angle 90°

Properties

Connection 1	BSP nut thread
Sealing form 1	60° outer cone
Connection 2	BSP cylindrical external threads
Sealing form 2	60° inner cone
Design	Connectors
Construction	Angle 90°
Material	Stainless steel



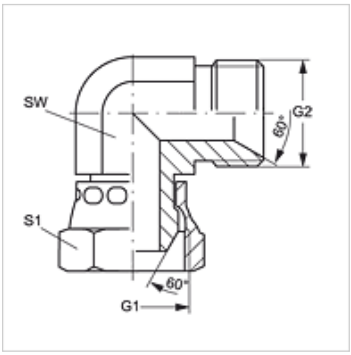

Item

Identification	G1 + G2	AF (mm)	S1
W90 AB 02 HB VA	G 1/8" -28	11	14
W90 AB 04 HB VA	G 1/4" -19	14	19
W90 AB 06 HB VA	G 3/8" -19	19	22
W90 AB 08 HB VA	G 1/2" -14	22	27
W90 AB 12 HB VA	G 3/4" -14	27	32
W90 AB 16 HB VA	G 1" -11	33	41
W90 AB 20 HB VA	G 1.1/4" -11	41	50
W90 AB 24 HB VA	G 1.1/2" -11	50	60
W90 AB 32 HB VA	G 2" -11	66	70

SW, S1, S2 = With across flats

Despite careful checking, we cannot guarantee the accuracy of all information included on this site, and we accept no liability.