W90 AB HJ

Connector, angle 90°

Properties

Connection 1	BSP nut thread
Sealing form 1	60° inner cone
Connection 2	UN/UNF external threads
Sealing form 2	74° outer cone
Design	Connectors
Construction	Angle 90°
Material	Steel
Surface	electro galvanised



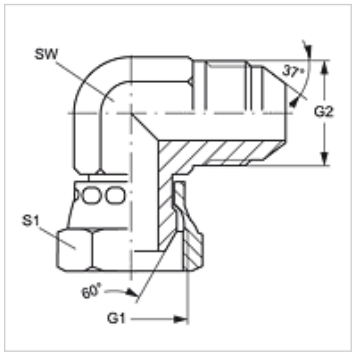

Item

Identification	G1	G2	AF (mm)	S1
W90 AB 04 HJ	G 1/4" -19	7/16"-20 UNF	11	14
W90 AB 06 HJ	G 3/8" -19	9/16"-18 UNF	14	19
W90 AB 08 HJ	G 1/2" -14	3/4"-16 UNF	19	22
W90 AB 10 HJ	G 5/8" -14	7/8"-14 UNF	22	22
W90 AB 12 HJ	G 3/4" -14	1.1/16" -12 UN	27	27

SW, S1, S2 = With across flats

Despite careful checking, we cannot guarantee the accuracy of all information included on this site, and we accept no liability.