W90 AJ HB

Connection socket, angle 90°

Properties

Connection 1	UN/UNF nut threads
Sealing form 1	74° inner cone
Connection 2	BSP cylindrical external threads
Sealing form 2	60° inner cone
Design	Connection sockets
Construction	Angle 90°
Material	Steel
Surface	electro galvanised



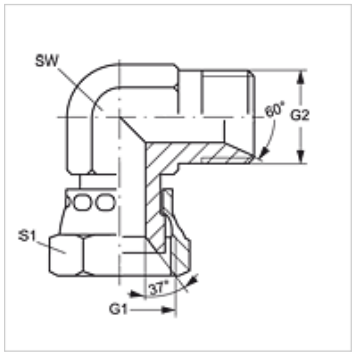

Item

Identification	G1	G2	AF (mm)	S1
W90 AJ 04 HB	7/16"-20 UNF	G 1/4" -19	17	17
W90 AJ 06 HB	9/16"-18 UNF	G 3/8" -19	19	14
W90 AJ 08 HB	3/4"-16 UNF	G 1/2" -14	22	19
W90 AJ 10 HB	7/8" -14 UNF	G 5/8" -14	27	22
W90 AJ 12 HB	1.1/16" -12 UN	G 3/4" -14	32	27

SW, S1, S2 = With across flats

Despite careful checking, we cannot guarantee the accuracy of all information included on this site, and we accept no liability.