W90 AOB HB

Connector, angle 90°

HANSA-FLEX

Properties

Connection 1	BSP nut thread
Sealing form 1	60° outer cone with O-ring
Connection 2	BSP cylindrical external threads
Sealing form 2	60° inner cone
Design	Connectors
Construction	straight
Material	Steel
Surface	electro galvanised



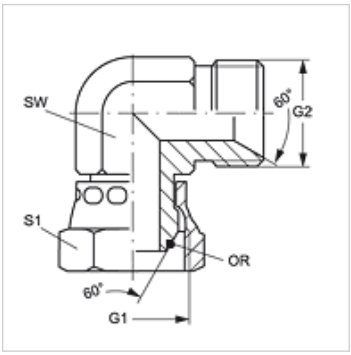

Item

Identification	G1 + G2	AF (mm)	S1	OR
W90 AOB 02 HB	G 1/8" -28	11	14	4.5 x 1.5
W90 AOB 04 HB	G 1/4" -19	14	17	6.5 x 1.0
W90 AOB 06 HB	G 3/8" -19	19	22	8.1 x 1.6
W90 AOB 08 HB	G 1/2" -14	22	27	12.1 x 1.6
W90 AOB 10 HB	G 5/8" -14	25	27	13.1 x 1.6
W90 AOB 12 HB	G 3/4" -14	27	32	17.1 x 1.6
W90 AOB 16 HB	G 1" -11	33	41	22.1 x 1.6
W90 AOB 20 HB	G 1.1/4" -11	41	50	29.1 x 1.6
W90 AOB 24 HB	G 1.1/2" -11	50	60	35.1 x 1.6

SW, S1, S2 = With across flats

Despite careful checking, we cannot guarantee the accuracy of all information included on this site, and we accept no liability.