W90 HB
Connector, angle 90°

Properties

Connection 1	BSP external thread, cylindrical
Sealing form 1	60° inner cone
Connection 2	BSP cylindrical external threads
Sealing form 2	60° inner cone
Design	Connectors
Construction	Angle 90°
Material	Steel
Surface	electro galvanised



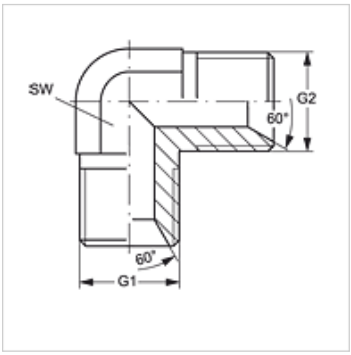

Item

Identification	G1	G2	AF (mm)
W90 HB 02	G 1/8" -28	G 1/8" -28	11
W90 HB 04 HB 02	G 1/4" -19	G 1/8" -28	14
W90 HB 04	G 1/4" -19	G 1/4" -19	14
W90 HB 06 HB 04	G 3/8" -19	G 1/4" -19	19
W90 HB 06	G 3/8" -19	G 3/8" -19	19
W90 HB 08 HB 06	G 1/2" -14	G 3/8" -19	22
W90 HB 08	G 1/2" -14	G 1/2" -14	22
W90 HB 10	G 5/8" -14	G 5/8" -14	22
W90 HB 12 HB 08	G 3/4" -14	G 1/2" -14	27
W90 HB 12	G 3/4" -14	G 3/4" -14	27
W90 HB 16 HB 12	G 1" -11	G 3/4" -14	33
W90 HB 16	G 1" -11	G 1" -11	33
W90 HB 20 HB 16	G 1.1/4" -11	G 1" -11	41
W90 HB 20	G 1.1/4" -11	G 1.1/4" -11	41
W90 HB 24	G 1.1/2" -11	G 1.1/2" -11	50
W90 HB 32	G 2" -11	G 2" -11	55

AF = Width across flats

Product versions

W90 HB VA	Fitting socket, angle 90°, Stainless steel

Despite careful checking, we cannot guarantee the accuracy of all information included on this site, and we accept no liability.