W90 HMO HJ

Screw-in socket, angle 90°

HANSA-FLEX

Properties

Connection 1	metric cylindrical outer thread
Sealing form 1	O-ring seal on screw-in socket
Connection 2	UN/UNF external threads
Sealing form 2	74° outer cone
Design	Adjustable direction screw-in socket
Construction	Angle 90°
Material	Steel
Surface	electro galvanised



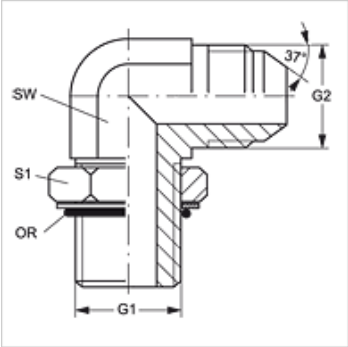

Item

Identification	G1	G2	AF (mm)	S1	OR
W90 HMO 10 HJ 04	M 10 x 1	7/16"-20 UNF	11	14	8.2 x 1.5
W90 HMO 10 HJ 05	M 10 x 1	1/2"-20 UNF	13	14	8.2 x 1.5
W90 HMO 12 HJ 04	M 12 x 1.5	7/16"-20 UNF	13	17	9.4 x 2.1
W90 HMO 12 HJ 05	M 12 x 1.5	1/2"-20 UNF	13	17	9.4 x 2.1
W90 HMO 14 HJ 04	M 14 x 1.5	7/16"-20 UNF	19	19	11.4 x 2.1
W90 HMO 14 HJ 05	M 14 x 1.5	1/2"-20 UNF	13	19	11.4 x 2.1
W90 HMO 14 HJ 06	M 14 x 1.5	9/16"-18 UNF	14	19	11.4 x 2.1
W90 HMO 16 HJ 06	M 16 x 1.5	9/16"-18 UNF	19	22	13.4 x 2.1
W90 HMO 16 HJ 08	M 16 x 1.5	3/4"-16 UNF	19	22	13.4 x 2.1
W90 HMO 18 HJ 06	M 18 x 1.5	9/16"-18 UNF	22	22	15.4 x 2.1
W90 HMO 18 HJ 08	M 18 x 1.5	3/4"-16 UNF	19	24	15.4 x 2.1
W90 HMO 18 HJ 10	M 18 x 1.5	7/8"-14 UNF	22	24	15.4 x 2.1
W90 HMO 20 HJ 08	M 20 x 1.5	3/4"-16 UNF	19	24	17.3 x 2.4
W90 HMO 20 HJ 10	M 20 x 1.5	7/8"-14 UNF	22	24	17.3 x 2.4
W90 HMO 22 HJ 08	M 22 x 1.5	3/4"-16 UNF	19	27	19.4 x 2.1
W90 HMO 22 HJ 10	M 22 x 1.5	7/8"-14 UNF	22	27	19.4 x 2.1
W90 HMO 22 HJ 12	M 22 x 1.5	1.1/16" -12 UN	27	27	19.4 x 2.1
W90 HMO 27 HJ 12	M 27 x 2	1.1/16" -12 UN	27	32	23.7 x 2.8
W90 HMO 27 HJ 16	M 27 x 2	1.5/16" -12 UN	33	32	23.7 x 2.8
W90 HMO 33 HJ 16	M 33 x 2	1.5/16" -12 UN	33	41	29.7 x 2.8
W90 HMO 42 HJ 20	M 42 x 2	1.5/8" -12 UN	41	50	38.7 x 2.8
W90 HMO 48 HJ 24	M 48 x 2	1.7/8" -12 UN	48	55	46.7 x 2.8

SW, S1, S2 = With across flats

Despite careful checking, we cannot guarantee the accuracy of all information included on this site, and we accept no liability.